Sigen Sensor TP-CT(100, 300, 600)-WI, Sigen Sensor S1G TP-CT(100, 300, 600)-(433/868/915)

Installer Manual

Version: 03

Release date: 2026.06.09



Copyright Notice

Copyright© 2026 SigenergyTechnology Co., Ltd. All Rights Reserved.

Description in this document may contain predictive statements regarding financial and operating results, product portfolio, new technology, configurations and features of product. Several factors could cause difference between actual results and those expressed or implied in the predictive statements. Therefore, description in this document is provided for reference purpose only and constitutes neither an offer nor an acceptance. Sigenergy Technology Co., Ltd. may change the information at any time without notice.

SIGENERGY and other Sigenergy trademarks are owned by Sigenergy Technology Co., Ltd.

All trademarks and registered trademarks in this document belong to their owners.

Website | LinkedIn | YouTube

www.sigenergy.com

Contents

Chapter 1 Safety Precautions 04

Chapter 2 Product Introduction 05

2.1 Model Identifier 05

2.2 Introduction to the System Wiring Solution 07

2.2.1 Sigen Sensor TP-CT(100, 300, 600)-WI 07

2.2.2 Sigen Sensor S1G TP-CT(100, 300, 600)-(433, 868, 915) 09

2.3 Device Appearance and Dimensions 11

2.4 Port Introduction 12

Chapter 3 Checks Before Installation 13

Chapter 4 Location Requirements 15

Chapter 5 Guide Rail Installation 17

Chapter 6 Cable Connections 18

6.1 Recommended Integration Relationship Plan 18

6.1.1 Sigen Sensor TP-CT(100, 300, 600)-WI 18

6.1.2 Sigen Sensor S1G TP-CT(100, 300, 600)-(433, 868, 915) 22

6.2 AC Cable Connection 26

6.3 Signal Cable Connection 27

Chapter 7 Equipment Power-on 29

Chapter 8 Downloading mySigen App and Creating a New System 32

Chapter 9 Appendix 33

9.1 Technical Parameters 33

9.2 Frequently Asked Questions 34

Chapter 1 Safety Precautions

Caution

- Only trained or qualified persons with electrical engineering knowledge can work directly on the device.
- Operators should be familiar with national and local laws, regulations, and standards, and the compositions and operating principles of relevant systems.
- Before operations, please carefully read operating requirements and important notice in this document. Any equipment damage caused by improper operation will not be covered under warranty.

Chapter 2 Product Introduction

- Three-phase four wire electronic energy meter is designed based on power monitoring and energy metering demands for electric power system, communication industry, construction industry, etc. mainly applied into the measurement and display for the electric parameters in the electric circuit including three voltage, three current, active power, reactive power, frequency, positive& negative energy.
- Adopting the standard DIN35mm din rail mounting and modular design, it is characterized with small volume, easy installation and easy networking, widely applied into the internal energy monitoring and assessment for industrial and mining enterprises, hotels, schools, large public buildings.

2.1 Model Identifier

Sigen Sensor TP-CT Models:

- Sigen Sensor TP-CT100-WI
- Sigen Sensor TP-CT300-WI
- Sigen Sensor TP-CT600-WI
- Sigen Sensor S1G TP-CT100-433
- Sigen Sensor S1G TP-CT100-868
- Sigen Sensor S1G TP-CT100-915
- Sigen Sensor S1G TP-CT300-433
- Sigen Sensor S1G TP-CT300-868
- Sigen Sensor S1G TP-CT300-915
- Sigen Sensor S1G TP-CT600-433
- Sigen Sensor S1G TP-CT600-868
- Sigen Sensor S1G TP-CT600-915

Model Identifier (Example)

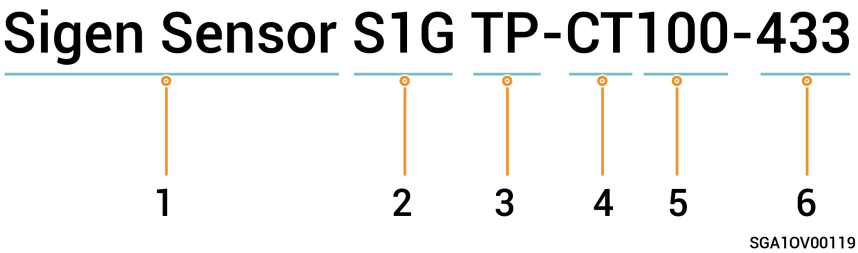

No.	Definition	Description
1	Product series	Sigen power sensor

No.	Definition	Description
2	Communication method	S1G: Sub-1 GHz (below 1 GHz) wireless communication, referring to unlicensed ISM-band wireless technology that operates at frequencies < 1 GHz.
3	Electrical system distribution type	TP: three-phase
4	Current sampling method	CT: current transformer sampling
5	Maximum sampling current	100: 100 A
6	Communication band	433: 433 MHz (megahertz) wireless communication band

2.2 Introduction to the System Wiring Solution

2.2.1 Sigen Sensor TP-CT(100, 300, 600)-WI

Option 1: Pair With Sigen WLAN Inverter

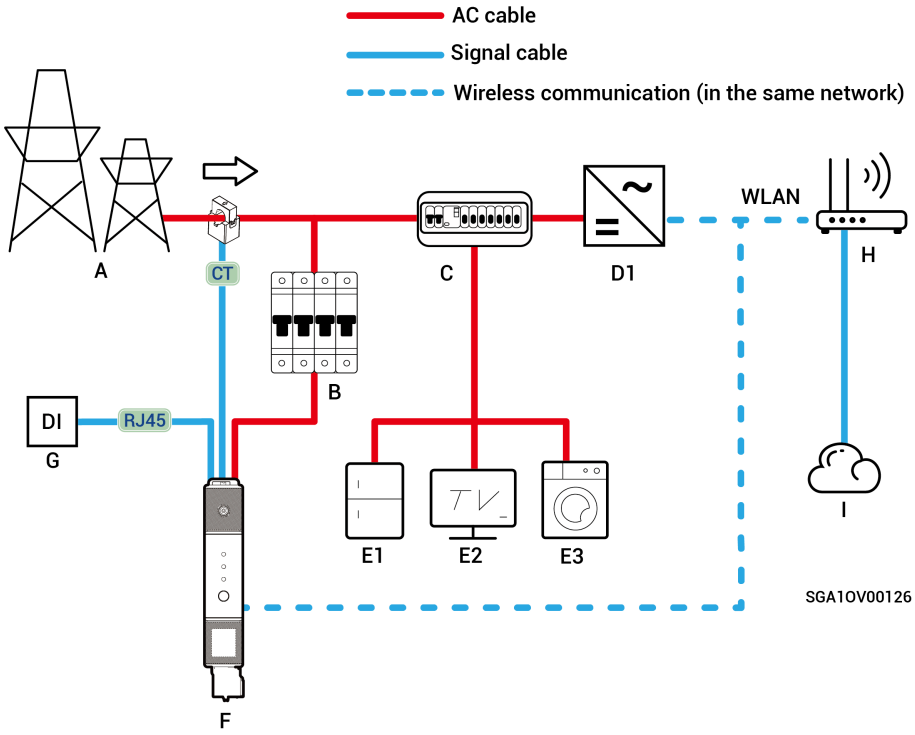

Option 2: Pair With Sigen RS485 Inverter

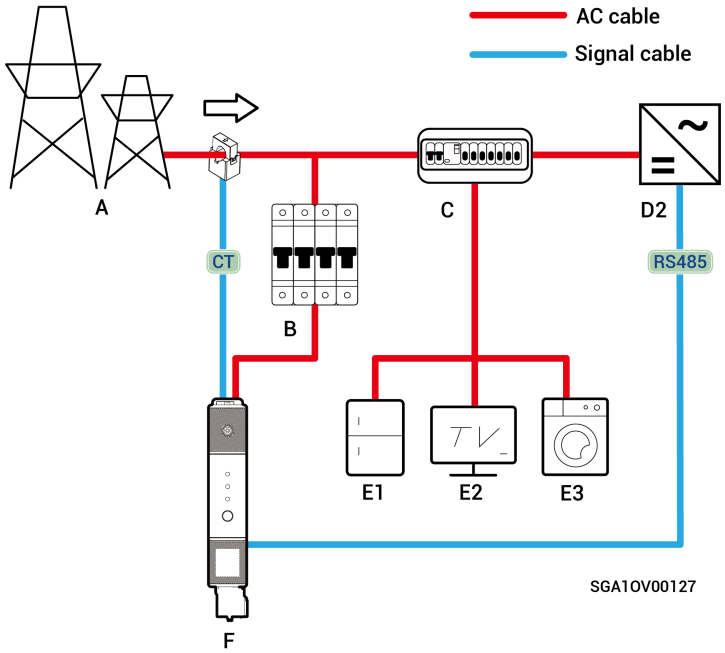

No.	Device/ Component	Model/Version	Function Description
A	Power grid	—	—
B	Three-phase AC switch[1].	—	Rated voltage of the AC switch must be ≥ 380 Va.c.
C	Household distribution panel [2]	—	The distribution panel's AC switch rated voltage must be ≥ 380 Va.c., and the rated current must be ≥ the maximum total output current of the inverter × 1.25 [3].
D	Sigen inverter	—	● D1: Sigen inverter that supports WLAN connection. ● D2: Sigen inverter that supports RS485 cable connection.
E	Household loads	—	—
F	Sigen power sensor	● Sigen Sensor TP-CT100-WI ● Sigen Sensor TP-CT300-WI ● Sigen Sensor TP-CT600-WI	Provide data collection at the grid connection point to enable zero-power grid connection functionality. ● 2.4 GHz WLAN: □ Frequency Band: 2412 MHz to 2472 MHz □ Transmitter Power: 18.86 dBm ● BLE(Bluetooth Low Energy): □ Frequency Band: 2402 MHz to 2480 MHz □ Transmitter Power: 8.84 dBm
G	External control input device	—	Used for power scheduling (such as demand response management, DRMs) and ripple control.
H	Router	—	Used when communicating via WLAN.
I	mySigen (App)	—	Android 6.0 or later. iOS 12.0 or later.

Note [1]:

- It must be marked as the disconnecting device for the equipment.
- It must be installed in the networking circuit, and it is recommended to mount it inside the household distribution panel.
- It must be suitably located and easily reached.

Note [2]: It is recommended to reserve space in the household distribution panel for installing the AC switch that controls the Sigen power sensor; the circuit breaker will trip for overcurrent protection.

Note [3]: The inverter's maximum output current can be found in the corresponding Sigen Product Datasheets.

2.2.2 Sigen Sensor SIG TP-CT(100, 300, 600)-(433, 868, 915)

Option 1: Pair With Sigen Sub-1 GHz Inverter

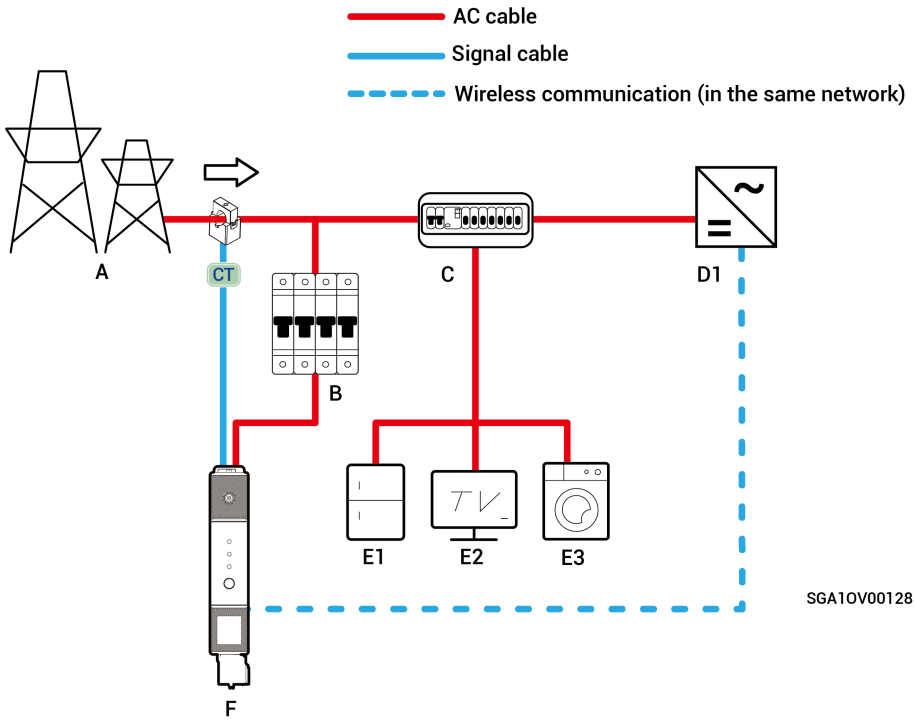

Option 2: Pair With Sigen RS485 Inverter

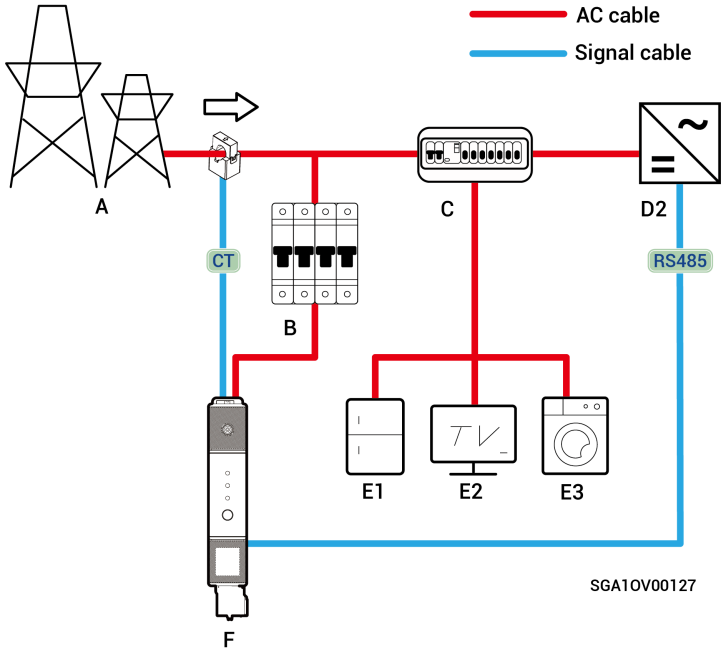

No.	Device/ Component	Model/Version	Function Description
A	Power grid	—	—

No.	Device/ Component	Model/Version	Function Description
B	Three-phase AC switch[1]	—	Rated voltage of the AC switch must be ≥ 380 Va.c.
C	Household distribution panel [2]	—	The distribution panel's AC switch rated voltage must be ≥ 380 Va.c., and the rated current must be ≥ the maximum total output current of the inverter × 1.25[3].
D	Sigen inverter	—	• D1: Sigen inverter that supports Sub-1 GHz connection. • D2: Sigen inverter that supports RS485 cable connection.
E	Household loads	—	—
F	Sigen power sensor	• Sigen Sensor S1G TP-CT100-433 • Sigen Sensor S1G TP-CT100-868 • Sigen Sensor S1G TP-CT100-915 • Sigen Sensor S1G TP-CT300-433 • Sigen Sensor S1G TP-CT300-868 • Sigen Sensor S1G TP-CT300-915 • Sigen Sensor S1G TP-CT600-433 • Sigen Sensor S1G TP-CT600-868 • Sigen Sensor S1G TP-CT600-915	Provide data collection at the grid connection point to enable zero-power grid connection functionality.

Note [1]:

- It must be marked as the disconnecting device for the equipment.
- It must be installed in the networking circuit, and it is recommended to mount it inside the household distribution panel.
- It must be suitably located and easily reached.

Note [2]: It is recommended to reserve space in the household distribution panel for installing the AC switch that controls the Sigen power sensor; the circuit breaker will trip for overcurrent protection.

Note [3]: The inverter's maximum output current can be found in the corresponding Sigen Product Datasheets.

2.3 Device Appearance and Dimensions

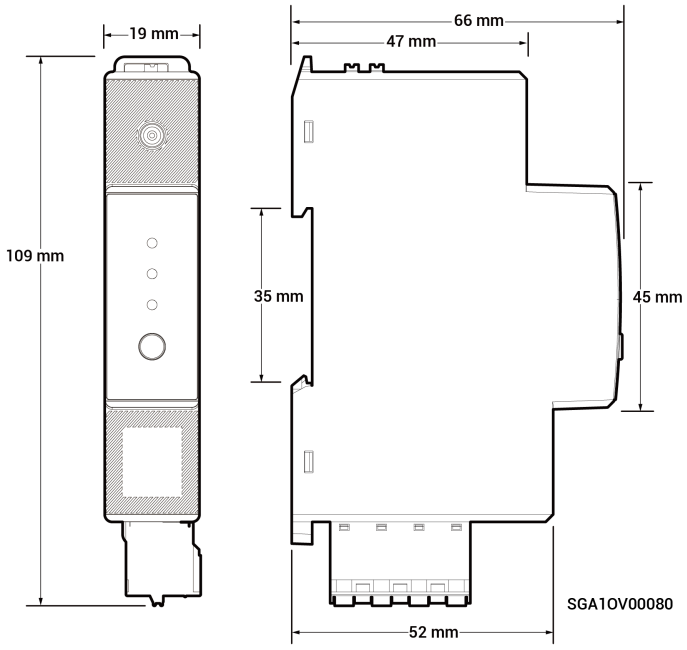

2.4 Port Introduction

Top View

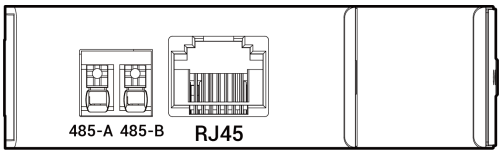

SGA1OV00095

No.	Marking	Name
1	485-A/485-B	RS485 cable interface
2	RJ45	Control cable interface

Bottom View

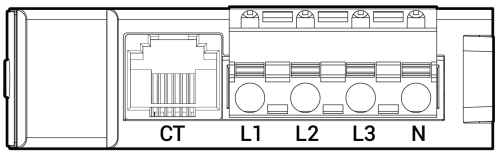

SGA1OV00095

No.	Marking	Name
1	CT	CT cable interface
2	L1/L2/L3/N	AC cable interface

Chapter 3 Checks Before Installation

- Check that the boxed components are complete and that their appearance is intact. If there are any abnormalities, promptly contact your sales representative.
- Parts and accessories supplied with the packing box are personal assets of the owner and must not be taken away from the installation site.
- Check and ensure the completeness of personal protective equipment and installation tools; replenish if necessary.
- Check and ensure the correctness of quantity and specifications of the installer-provided cables; re-prepare if necessary.

Personal Protective Equipment



Insulating gloves



Insulating shoes

Installation Tools

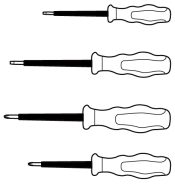

Insulated screwdriver set

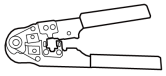

Network cable pliers

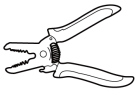

Wire stripper

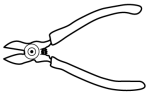

Wire cutter

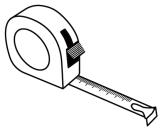

Tape measure

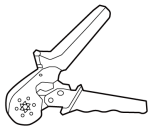

Cold terminal crimping pliers

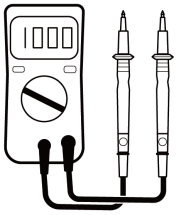

Multimeter



Crimping pliers

Installer-provided Cables

Caution

- The installer-provided cable specifications shall conform to the applicable regulations and standards in the countries/regions where the installation is located.

Caution

- Connect L1, L2, L3, and N in order. Do not interchange them. Follow the operating instructions in this document for details.

No.	Cable Name	Recommended Specification	
1	AC cable	Copper core cable (L1, L2, L3, N) Single-core conductor cross-sectional area: 0.5 mm^2 to 2.5 mm^2 Outer diameter: 2 mm to 10 mm	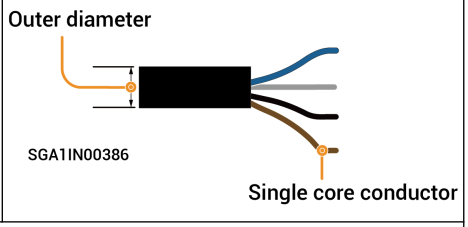
2	(Optional) control cable	The RJ45 cable is an 8-core shielded twisted pair network cable compliant with EIA/TIA 568B. Conductor cross-sectional area: 0.13 mm^2 to 0.2 mm^2 Outer diameter: 4 mm to 7.5 mm Single cable length: ≤ 100 m[1]	
3	(Optional) RS485 cable	Shielded twisted pair cable for outdoor use Conductor cross-sectional area: 0.2 mm^2 to 1.5 mm^2 Outer diameter: 4.5 mm to 6.5 mm	

Note [1]: The cable length should be limited for good communication. Too long cable degrades the communication effect.

Chapter 4 Location Requirements

Tips

- Install the equipment indoors whenever possible. If outdoor installation is required, ensure it is installed in a waterproof electrical distribution box and strictly follow the installation instructions described in this section and applicable local laws and regulations.
- Before installing the equipment, be sure to read the following installation requirements carefully. The company will not bear any responsibility if the equipment malfunctions, is damaged, or even causes a personal safety accident during operation due to failure to operate as required.
- During installation, the mounting location should be selected in accordance with local firefighting, environmental protection regulations, and other relevant laws, as well as local low-voltage power distribution room codes. The specific installation location planning should be subject to the installer or engineering, procurement, and construction (EPC) contracts.

Installation Environment

- Do not install the equipment in a smoky, flammable, or explosive environment.
- Avoid exposing the equipment to direct sunlight, rain, standing water, snow, or dust. Install the equipment in a sheltered place. Take preventive measures in operating areas prone to natural disasters such as floods, mudslides, earthquakes, and typhoons.
- Do not install the equipment in an environment with strong electromagnetic interference (EMI).
- The temperature and humidity of the installation environment should meet equipment requirements.
- The equipment shall be installed in an area at least 500 m away from corrosion sources such as high salt or high acidity (corrosion sources include but are not limited to seaside, thermal power plant, chemical plant, smelter, coal plant, rubber plant, electroplating plant, etc.).
- In areas with good marine environments, such as Norway, where the nearshore salinity is ≤ 28 psu, the mounting distance of the device from the coastline can be appropriately relaxed to ≥ 200 m.
- Install the equipment in areas at an altitude ≤ 2,000 m.

Installation Location

- Do not install the equipment in areas easily accessible to children.
- Do not install the equipment in a place with fire hazards or is prone to moisturizing.
- Do not install the equipment in a sealed, poorly ventilated location without fire protection measures and difficult access for firefighters.
- You are advised to install the equipment in a location where you can easily access, install, operate, maintain it, and view the indicator status.
- Keep the equipment clear of vehicle passage when installed in a garage to avoid collisions.

Installation Base

Do not install the equipment on a flammable base.

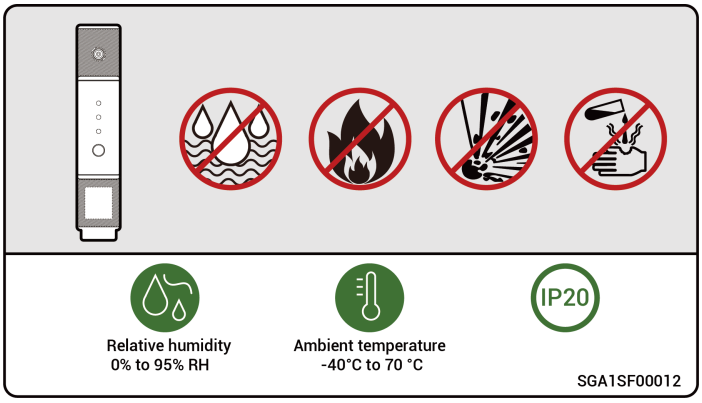
IP20
Relative humidity
0% to 95% RH
Ambient temperature
-40°C to 70 °C
SGA1SF00012

Chapter 5 Guide Rail Installation

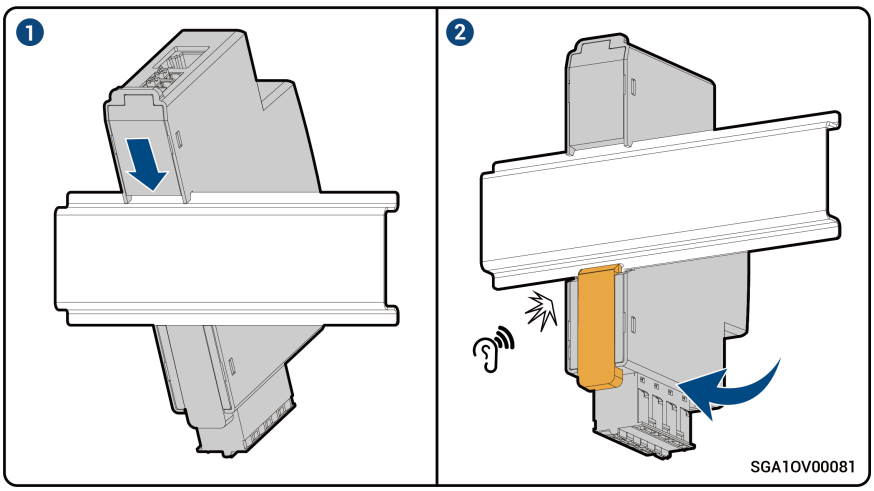

Chapter 6 Cable Connections

Danger

- Connect cables according to the corresponding labels to prevent personal injury and equipment damage caused by incorrect cable connection.
- Do not perform operations on the device with power on. Before operating, ensure the equipment's power supply is completely disconnected.

6.1 Recommended Integration Relationship Plan

6.1.1 Sigen Sensor TP-CT(100, 300, 600)-WI

Three-phase, Four-wire, Voltage Range: 100—277 Va.c. (L-N), 173–480 Va.c. (L-L)

Option 1: Pair With Sigen WLAN Inverter

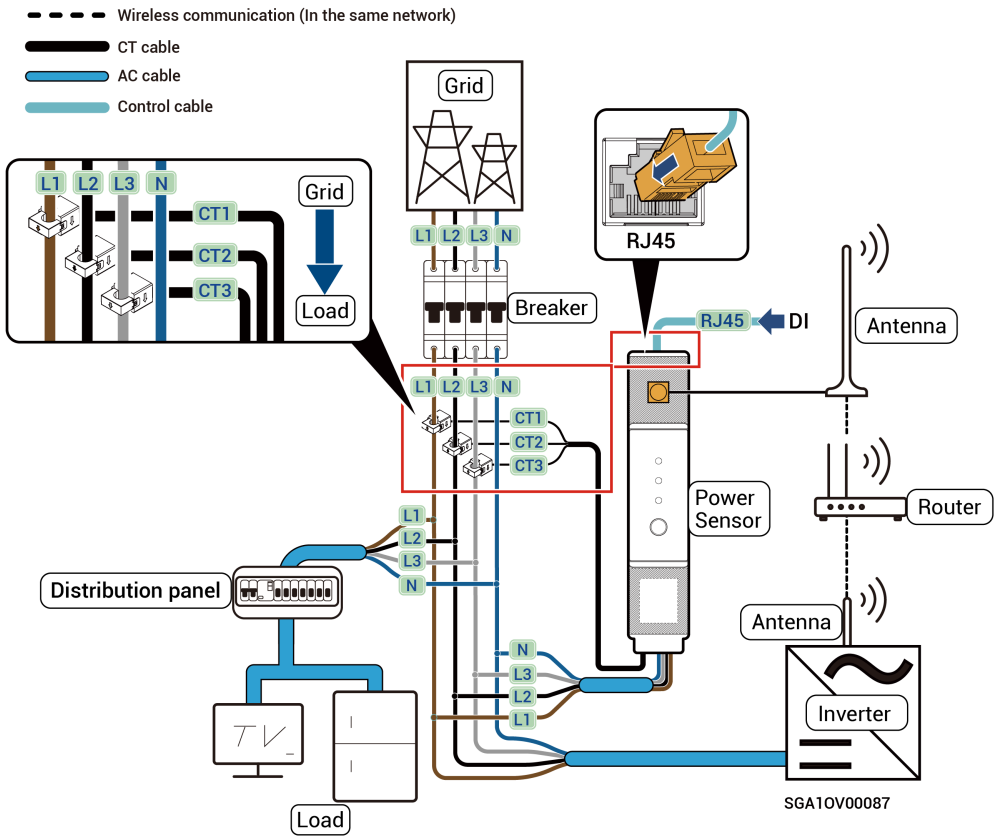

Option 2: Pair With Sigen RS485 Inverter

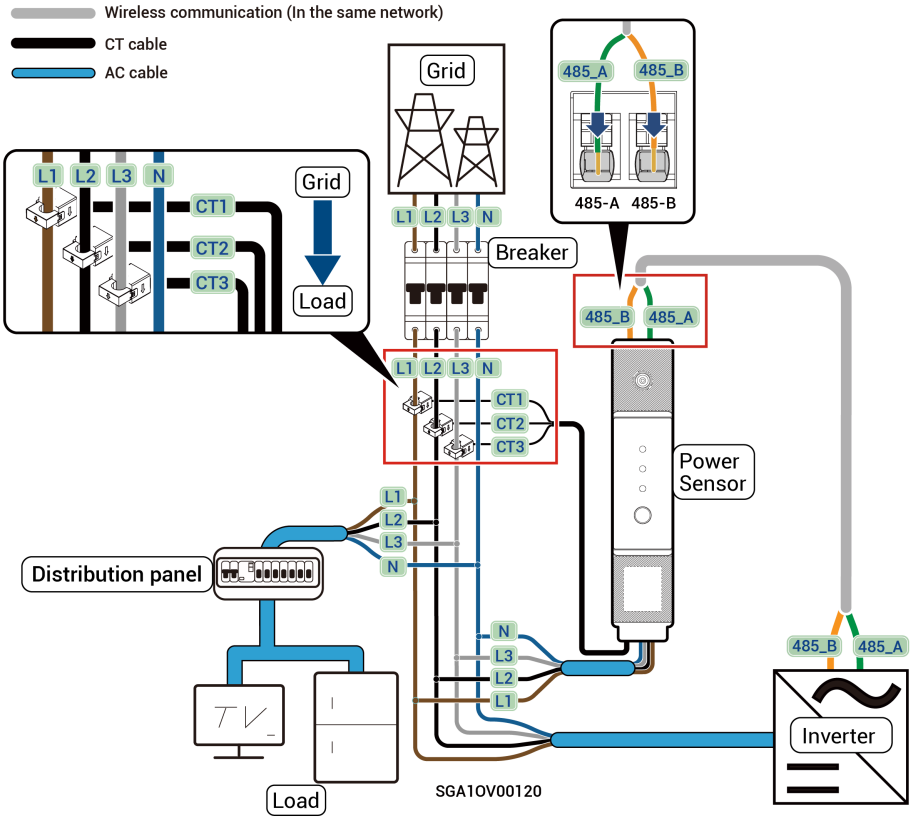

Three-phase, Three-wire, Voltage Range: 173—480 Va.c. (L-L)

Option 1: Pair With Sigen WLAN Inverter

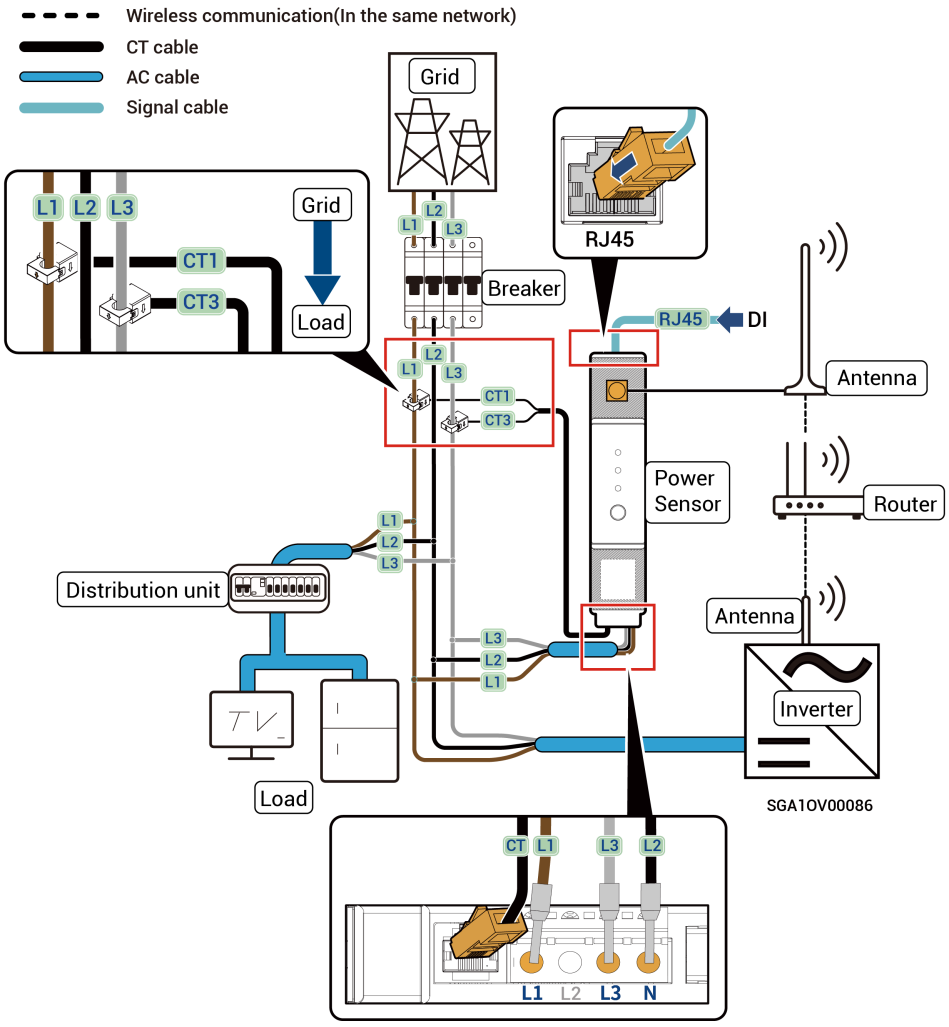

Option 2: Pair With Sigen RS485 Inverter

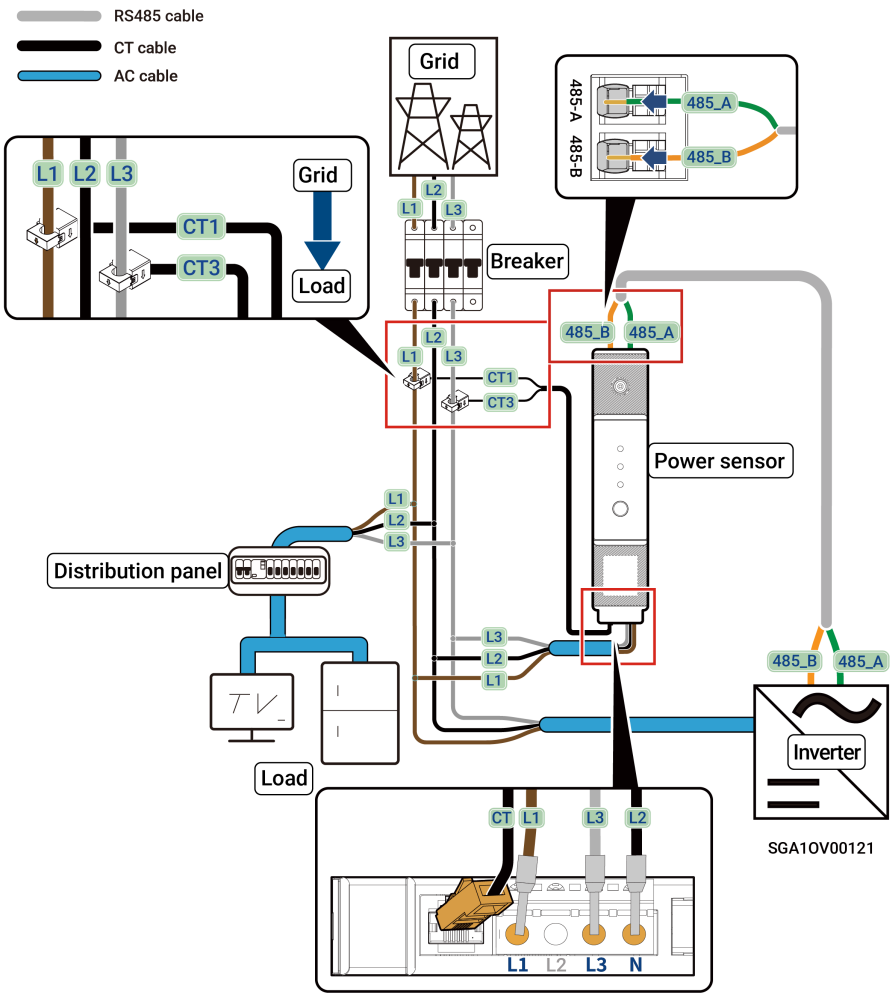
RS485 cable
CT cable
AC cable
Grid
485-A 485-B
485_A
485_B
L1 L2 L3
Grid
CT1
CT3
Load
Breaker
L2
L1 L3
485_B 485_A
CT1
CT3
Power sensor
L1
L2
L3
Distribution panel
L3
L2
L1
485_B 485_A
Inverter
Load
CT L1 L3 L2
L1 L2 L3 N
SGA1OV00121

6.1.2 Sigen Sensor S1G TP-CT(100, 300, 600)-(433, 868, 915)

Three-phase, Four-wire, Voltage Range: 100—277 Va.c. (L-N), 173–480 Va.c. (L-L)

Option 1: Pair With Sigen Sub-1 GHz Inverter

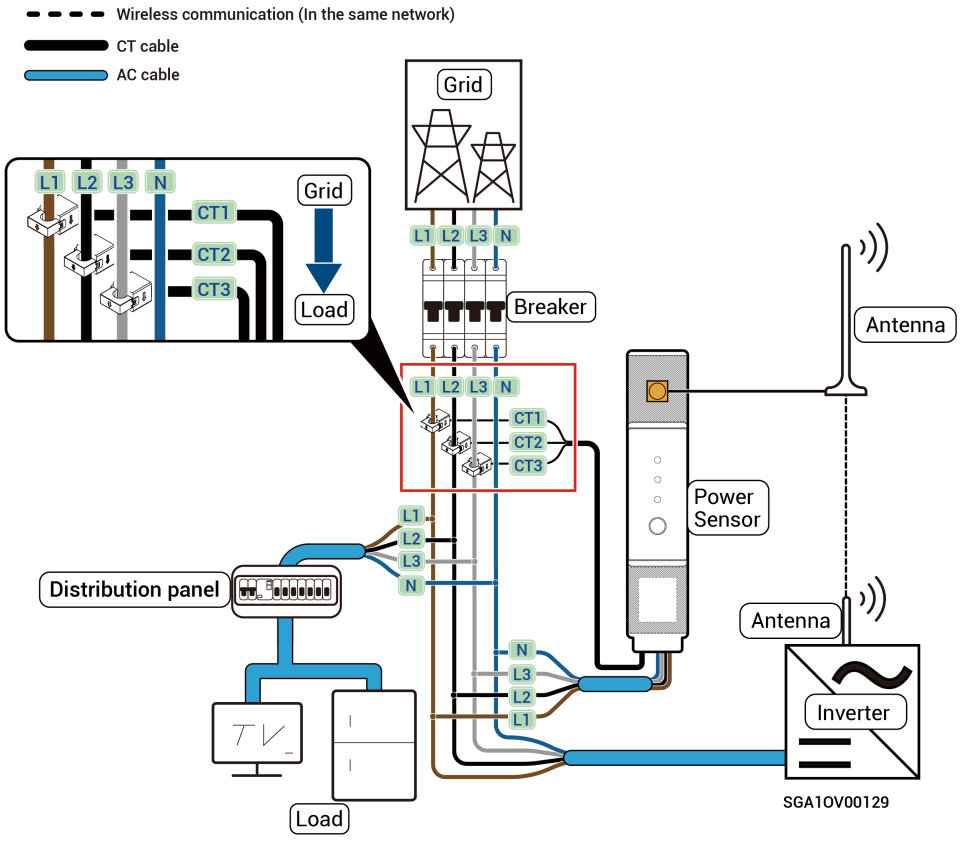

Option 2: Pair With Sigen RS485 Inverter

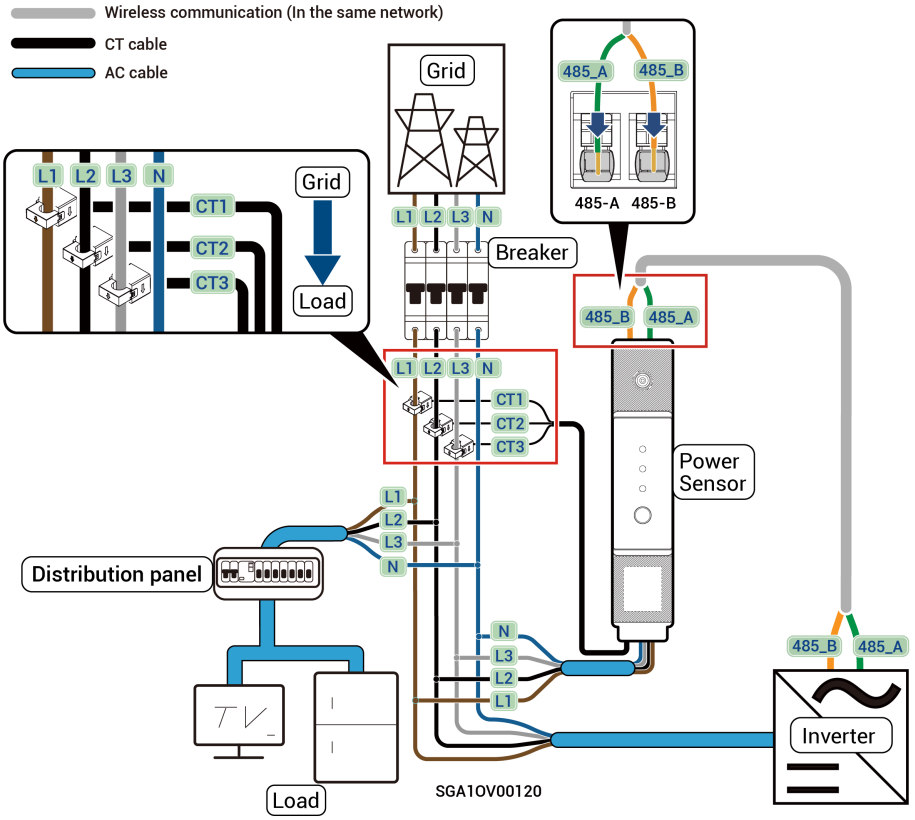

Three-phase, Three-wire, Voltage Range: 173—480 Va.c. (L-L)

Option 1: Pair With Sigen Sub-1 GHz Inverter

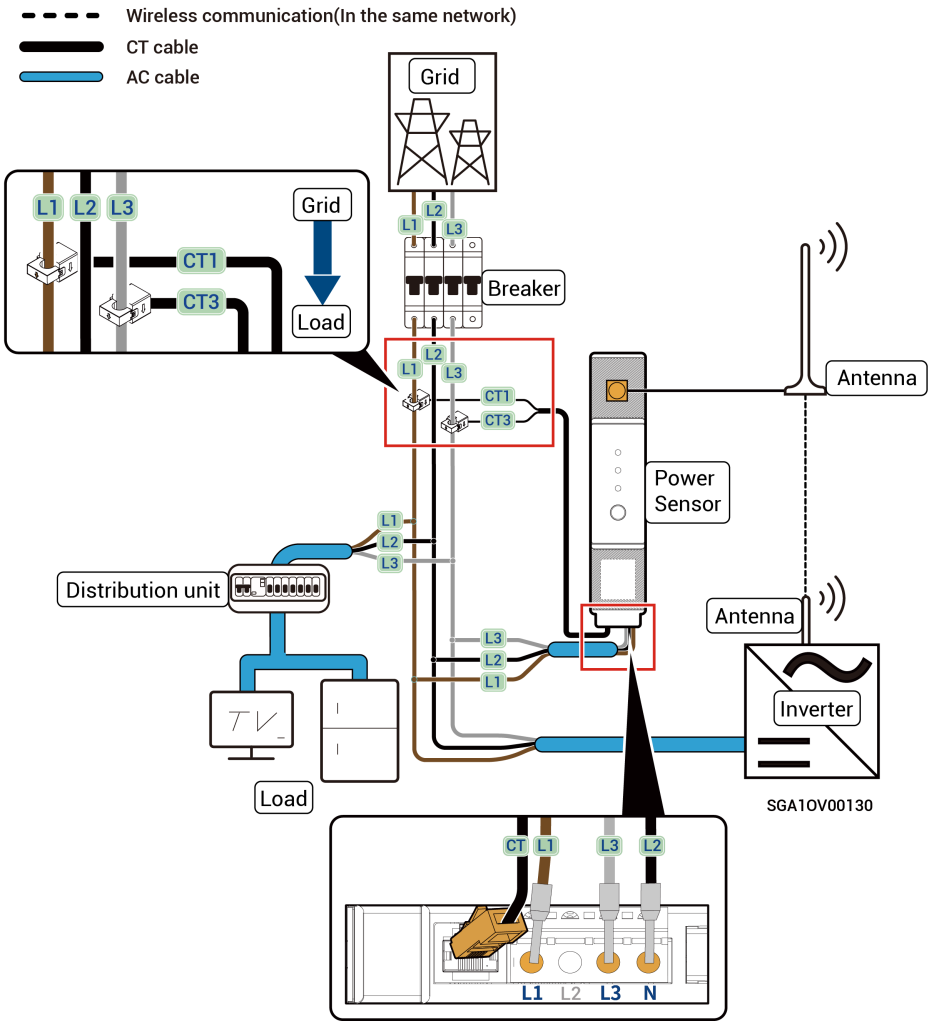

Option 2: Pair With Sigen RS485 Inverter

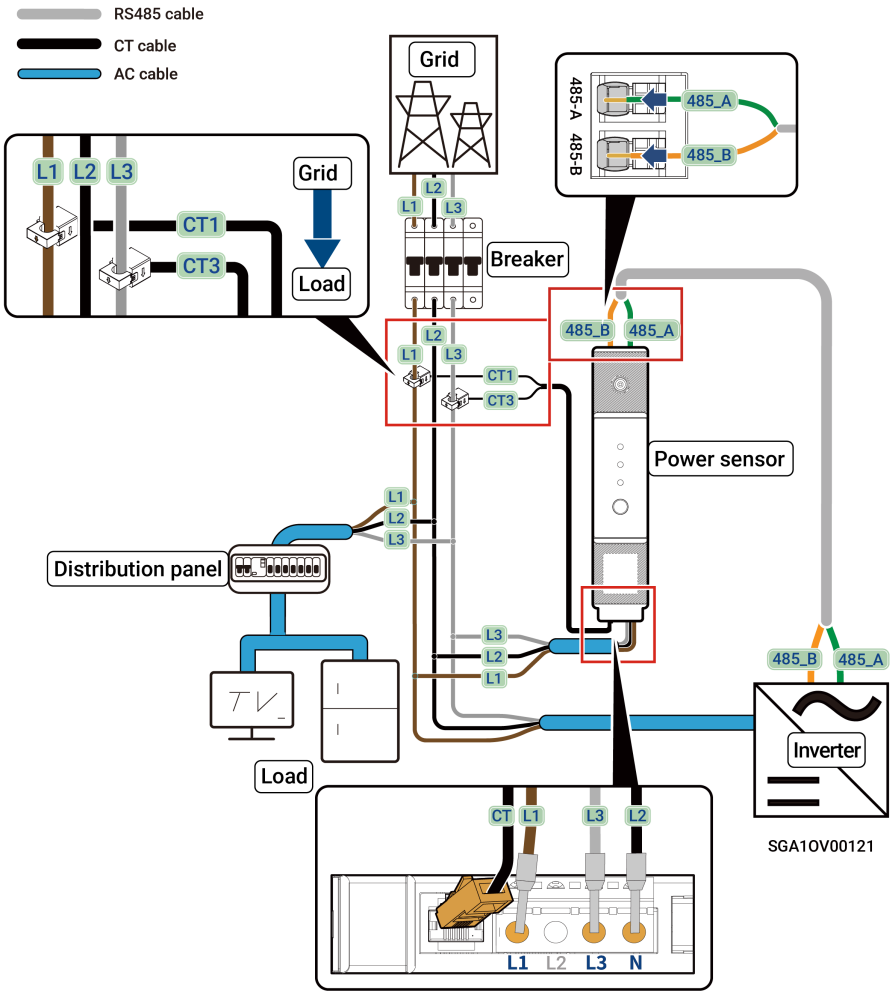
RS485 cable
CT cable
AC cable
Grid
L1
L2
L3
CT1
CT3
Load
Breaker
485-A
485-B
485_A
485_B
Power sensor
Distribution panel
Load
Inverter
SGA1OV00121
CT
L1
L2
L3
N

6.2 AC Cable Connection

Three-phase, Four-wire, Voltage Range: 100-277 Va.c. (L-N), 173-480 Va.c. (L-L)

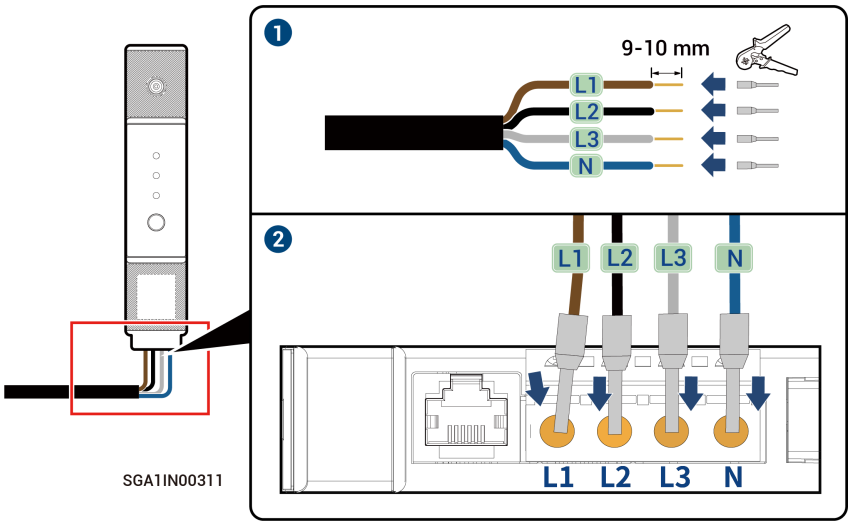

Three-phase, Three-wire, Voltage Range: 173-480 Va.c. (L-L)

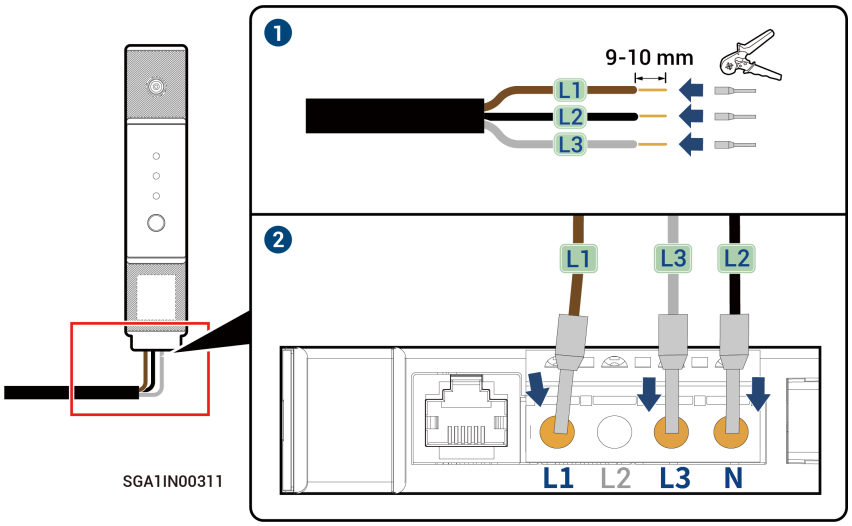

6.3 Signal Cable Connection

Ports and Functions

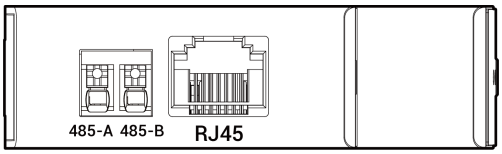

SGA1OV00095

No.	Pin Definition		Name	Description
1	485-A		RS485 signal_A+	RS485, custom port. Connect to the Sigen inverter for RS485 communication.
2	485-B		RS485 signal_B−	
3	RJ45	Pin1	DI1: Digital input 1 or DRM5 (for Australia)	RJ45. Connect to external devices for input control, used for power scheduling (such as demand response management, DRMs) and ripple control.
4		Pin2	DI2: Digital input 2 or DRM6 (for Australia)	
5		Pin3	DI3: Digital input 3 or DRM7 (for Australia)	
6		Pin4	DI4: Digital input 4 or DRM8 (for Australia)	
7		Pin5	Signal GND	
8		Pin6	DI5: Digital input 5 or DRM0 (for Australia)	
9		Pin7	No function.	
10		Pin8		

(Optional) RJ45 Control Cable Connection

Tips

❶: To use the control function, connect the control cable to Pin1 to Pin6.
❷: No function is available on Pin 7 and Pin 8.

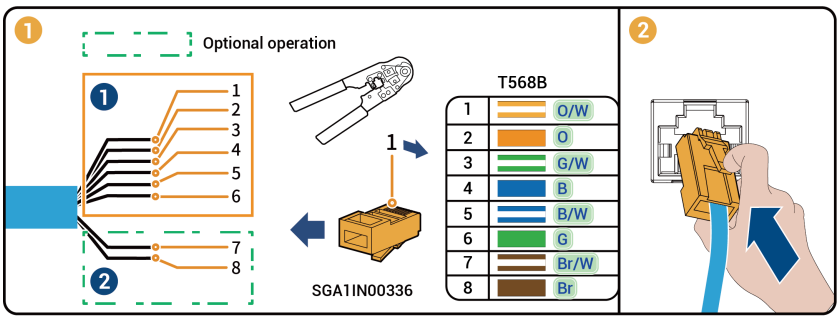

(Optional) RS485 Cable Connection

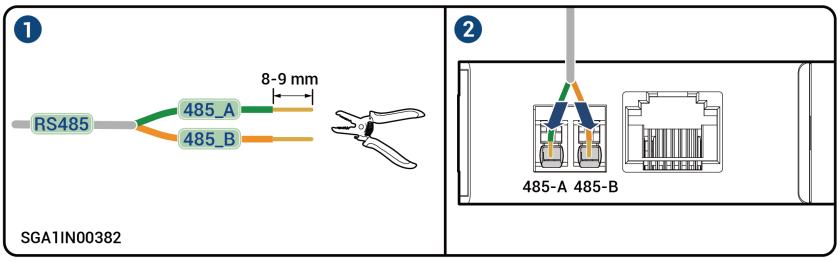

Chapter 7 Equipment Power-on

1. Turn on the upstream AC switch.
2. Observe the front-panel indicator light status of the power sensor to assess the device status.

Introduction to Device Buttons and Indicator Lights:

- Sigen Sensor TP-CT(100, 300, 600)-WI

Interface	Definition	Introduction
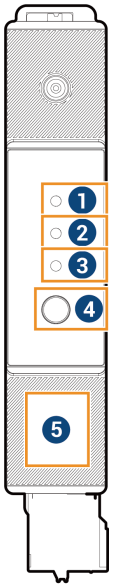 SGA1IN00312	1: Power indicator light	**Green steady:** The Sigen power sensor is powered.
	2: WLAN indicator light	**Purple steady:** The Sigen power sensor has no router network information and is not connected to the router. Perform network configuration. **Purple flashing:** The Sigen power sensor is connected to the router but not to the Sigen inverter. Wait, then check the connection between the Sigen inverter and the router. **Blue flashing:** The Sigen power sensor is connected to the Sigen inverter. The communication is normal. **Red steady:** The Sigen power sensor has router network information but is not connected to the router. Check whether the router is 2.4 GHz and whether the signal strength between the router and the Sigen power sensor is sufficient.
	3: RS485 indicator light	**Green flashing:** The RS485 communication of the Sigen power sensor is normal.

Interface	Definition	Introduction
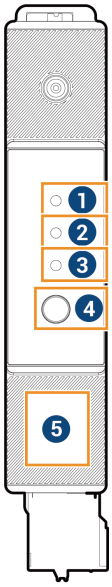 SGA1IN00312	4: Button	**Long press for 3 seconds:** Enter network configuration mode. Then you can connect to the Sigen power sensor via the mySigen App. **Long press for 10 seconds:** Three indicator lights turn off, and communication parameters are reset. After this, you must connect to the Sigen power sensor via the mySigen App and reconfigure the network.
	5: QR code	Used for WLAN network configuration.

- Sigen Sensor S1G TP-CT(100, 300, 600)-(433, 868, 915)

Interface	Definition	Introduction
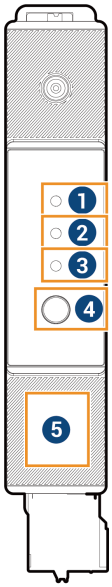 SGA1IN00312	1: Power indicator light	**Green steady:** The Sigen power sensor is powered.
	2: Sub-1 GHz indicator light	**Purple steady:** The Sigen power sensor is not connected to the Sigen device. **Purple flashing:** The Sigen power sensor is connected to the Sigen device. **Blue flashing:** The Sigen power sensor is connected to the Sigen device and is reporting metering data.
	3: RS485 indicator light	**Green flashing:** The RS485 communication of the Sigen power sensor is normal.
	4: Button	**Long press for 10 seconds:** Three indicator lights turn off and factory settings are restored. After this, you must re-add the Sigen power sensor via the mySigen App.

Interface	Definition	Introduction
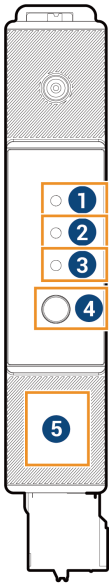 SGA1IN00312	5: QR code	Used to view device information of the Sigen power sensor.

Chapter 8 Downloading mySigen App and Creating a New System

Downloading mySigen App

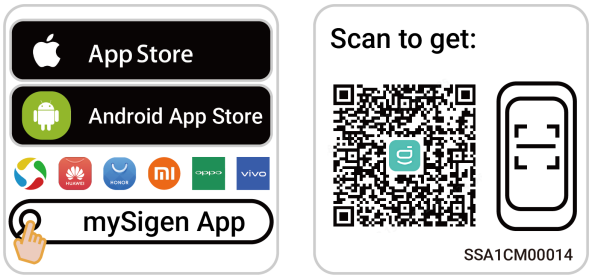

Adding the Sigen Power Sensor to the System

For detailed operational steps, refer to the Add/Delete/Replace a Sigen Product in the Existing Power Station in mySigen AppCreating New Systems Guide.

Chapter 9 Appendix

9.1 Technical Parameters

For more information on the parameters of this equipment, see the corresponding Sigen Product Datasheets.

9.2 Frequently Asked Questions

1. How to perform routine maintenance for the Sigen power sensor?

Answer: To ensure long-term reliable operation of this device, perform routine maintenance described in the table below.

Inspection Item	Inspection Method	Power Off or Not	Maintenance Interval
System cleaning	Regularly check whether the device is covered and dirty. Clean it up when necessary. Do not use tools that may cause electric shock or with damaged insulation when cleaning up, such as wire brushes.	Yes	Once every 3 months

2. How to interpret the symbols on the Sigen power sensor's external casing?

Answer: Refer to the following table for symbol descriptions.

Symbol	Description
	EU CE mark EU Conformity Statement: This product is marked with "CE" and complies therefore with the applicable harmonized European standards listed under the Radio Equipment Directive 2014/53/EU.
	Class II double-insulation symbol
	A single-measurement-unit active energy meter or reactive energy meter has a measurement unit with one voltage circuit and one current circuit (single-phase, two-wire circuit).
	A two-measurement-unit active energy meter or reactive energy meter, in which each measurement unit has one voltage circuit and one current circuit, and is connected for the two-wattmeter method (three-phase, three-wire circuit).
	A three-measurement-unit active energy meter or reactive energy meter, in which each measurement unit has one voltage circuit and one current circuit, and is connected for the three-wattmeter method (three-phase, four-wire circuit).
	Danger! High voltage High voltage exists inside the equipment when powered on. Do not open the casing when the equipment is running. Any maintenance or servicing operations must be performed by trained and skilled technical personnel.
	Warning! Life-threatening Potential risks exist when the device is operating. Please take protective measures before operating the device.

Symbol	Description
	Recyclable symbol Recyclable—The packaging and product materials are recyclable. Please dispose of in accordance with local recycling regulations.
	Do not dispose of this product as unsorted municipal waste. This product contains electrical and electronic components that must be collected separately. According to the WEEE Directive (2012/19/EU), this product should be handed over to a designated collection point for recycling of waste electrical and electronic equipment (WEEE). Improper handling may cause potential negative consequences for the environment and human health.