SigenStor Home

User Manual

Version: 11

Release date: 2026.04.17

Copyright Notice

Copyright© 2026 SigenergyTechnology Co., Ltd. All Rights Reserved.

Description in this document may contain predictive statements regarding financial and operating results, product portfolio, new technology, configurations and features of product. Several factors could cause difference between actual results and those expressed or implied in the predictive statements. Therefore, description in this document is provided for reference purpose only and constitutes neither an offer nor an acceptance. Sigenergy Technology Co., Ltd. may change the information at any time without notice.

SIGENERGY and other Sigenergy trademarks are owned by Sigenergy Technology Co., Ltd.

All trademarks and registered trademarks in this document belong to their owners.

Website	LinkedIn	YouTube

www.sigenergy.com

Contents

Revision History 05
Chapter 1 Safety Precautions 06
Chapter 2 Energy Storage System Introduction 08
2.1 Overview 08
2.1 Product Introduction 09
2.1.1 Inverter 09
2.1.2 Battery Pack 15
2.1.3 CT Sensor 16
2.1.4 Power Sensor 17
2.1.5 Communication Module 18
2.1.6 Sigen Backup Switch 19
2.2 Product Appearance 20
2.2.1 Appearance and Dimensions 20
2.2.2 Port Introduction 22
2.3 Label Description 28
2.4 Grid power supply mode 29
2.4.1 Single-phase System 29
2.4.2 Three-phase System 30
2.4.3 Low-voltage Three-phase System 31
2.4.4 Split-phase System 32
2.5 Introduction to system wiring 33
Chapter 3 Site Selection Requirements 40
Chapter 4 Equipment Installation and Wiring 44
Chapter 5 System Operation 45
5.1 Operational Mode 45
5.2 Backup Power Setup 49
5.3 Peak Shaving 50
5.4 LED Indicator State 53
5.5 mySigen App — Query and Settings 55

Chapter 6 System Maintenance 56
6.1 Routine Maintenance 56
6.2 Equipment Power-on/Power-off 57
6.3 Operating with Low Battery 59
6.4 Emergency Measures 60
Chapter 7 Appendix 62
7.1 Technical Parameter 62
7.2 Compliance Statements 63

Chapter 0 Revision History

Version	Date	Description
11	2026.04.17	Updated Three-phase System
10	2026.03.12	Updated Sigen Backup Switch Bottom view
09	2026.01.13	Added Compliance Statements
08	2025.11.07	Updated Energy Storage System Introduction Updated Site Selection Requirements
07	2025.08.08	Updated Energy Storage System Introduction Updated Site Selection Requirements
06	2025.02.05	Updated Energy Storage System Introduction Updated Site Selection Requirements Updated Equipment Installation and Wiring Updated Operational Mode
05	2024.12.06	Updated Equipment Installation and Wiring
04	2024.09.27	Updated Product Introduction Updated Introduction to system wiring Updated Operational Mode Updated Routine Maintenance Updated Equipment Power-on/Power-off
03	2024.05.31	Updated Introduction to system wiring Updated Site Selection Requirements Updated Equipment Installation and Wiring
02	2024.04.19	Updated Label Description Updated Grid power supply mode Updated Introduction to system wiring Updated Site Selection Requirements
01	2024.01.30	First official release.

Chapter 1 Safety Precautions

Basic Information

Before installation, operation, and maintenance of the equipment, familiarize yourself with this document.
The "Danger ", "Warning", "Caution" items described in this manual are only supplementary to all precautions.
The Company shall not be liable for equipment damage or property loss caused by the following reasons:

- Failure to obtain approval from the national, regional power authority.
- The installation environment does not meet international, national, or regional standards.
- Failure to observe local laws, regulations and norms when operating and maintaining equipment.
- The installation area does not meet the requirements of the equipment.
- Failure to follow the instructions and precautions in this document.
- Failure to follow the warning labels on equipment or tools.
- Negligent, improper operation or intentional damage.
- Battery capacity loss or irreversible damage caused by your failure to charge the device in time.
- Damage caused by your or a third party's replacement of our equipment (such as mixing our battery pack with other batteries, using our battery pack with other brands of inverters or converters, etc.).
- The equipment is damaged because of your or a third-party company fails to use the accessories supplied with the packing box or purchase and install accessories of the same specification.
- Equipment damage caused by improper operations such as disassembling, replacing, or modifying the software code without authorization.
- Equipment damage caused by force majeure (such as war, earthquake, fire, storm, lightning, flood, debris flow, etc.).
- Damage caused by the failure of the natural environment or external power parameters to meet the standard requirements of the equipment during actual operation (for example, the actual operating temperature of the equipment is too high or too low).
- The equipment was stolen.
- The equipment is damaged after the warranty period.

Safety Requirements

Danger

- An overheated battery pack may cause fire or explosion. Do not expose the device to high temperature or heat sources (such as fire, or heaters) around the equipment for a long time.

Danger

- Do not clean or soak the equipment with water, alcohol, or oil to avoid power leakage or battery pack leakage.
- Do not tipover or cause impact to the equipment. In case of an accident, please stop using the equipment immediately and contact your installer or sales representative, The equipment shall be inspected and evaluated by professional personnel before continuing to use.

Warning

- Do not touch the heat sink when the equipment is operating.
- When the equipment is operating, do not cover the decorative cover plate and keep the heat dissipation channel of 300–600 mm to avoid fire at high temperature.

Caution

- Do not use the equipment if it has any defects. If the equipment appears abnormal (for example, battery pack leakage or appearance distortion), contact your installer or sales representative. It is prohibited to disassemble the equipment by yourself.
- Carbon dioxide fire extinguishers and ABC dry powder fire extinguishers are recommended at home.
- If the equipment cannot be charged, please contact your installer or sales representative in time.

Do not use the equipment in the following situations:

- When connected to public infrastructure systems.
- When connected to emergency medical equipment.
- When connected to elevators and other control devices.
- Any other critical systems.

Chapter 2 Energy Storage System Introduction

2.1 Overview

Introduction

This document mainly introduces the product introduction, system wiring, system operation and maintenance of the devices in the SigenStor Home.

Readers

This document is suitable for product users and professionals.

Sign Definition

The following signs may be used in the document to indicate security precautions or key information. Before installation, operation, and maintenance of the equipment, familiarize yourself with signs and their definitions.

Signs	Definition
Danger	Danger. Failure to comply will result in death or serious personal injury.
Warning	Warning. Failure to comply will result in serious personal injury or property damage.
Caution	Caution. Failure to comply will result in property damage.
Tips	Important or key information, and supplementary operation tips.

2.1 Product Introduction

2.1.1 Inverter

- SigenStor EC inverter can be used in PV storage scenarios and needs to be used in conjunction with PV modules and SigenStor BAT.
- Sigen Hybrid inverter can be used alone in PV scenarios in conjunction with PV modules. It can also be purchased and activated with a designated license to work alongside PV modules and SigenStor BAT in a PV storage system.

2.1.1.1 Single-phase System (3.0-6.0)

Product Name	Model	Name
SigenStor EC	SigenStor EC 3.0 SP	Sigen Energy Controller 3.0 kW Single Phase
SigenStor EC	SigenStor EC 3.6 SP	Sigen Energy Controller 3.6 kW Single Phase
SigenStor EC	SigenStor EC 4.0 SP	Sigen Energy Controller 4.0 kW Single Phase
SigenStor EC	SigenStor EC 4.6 SP	Sigen Energy Controller 4.6 kW Single Phase
SigenStor EC	SigenStor EC 5.0 SP	Sigen Energy Controller 5.0 kW Single Phase
SigenStor EC	SigenStor EC 6.0 SP	Sigen Energy Controller 6.0 kW Single Phase
Sigen Hybrid	Sigen Hybrid 3.0 SP	Sigen Hybrid Inverter 3.0 kW Single Phase
Sigen Hybrid	Sigen Hybrid 3.6 SP	Sigen Hybrid Inverter 3.6 kW Single Phase
Sigen Hybrid	Sigen Hybrid 4.0 SP	Sigen Hybrid Inverter 4.0 kW Single Phase
Sigen Hybrid	Sigen Hybrid 4.6 SP	Sigen Hybrid Inverter 4.6 kW Single Phase
Sigen Hybrid	Sigen Hybrid 5.0 SP	Sigen Hybrid Inverter 5.0 kW Single Phase
Sigen Hybrid	Sigen Hybrid 6.0 SP	Sigen Hybrid Inverter 6.0 kW Single Phase

2.1.1.2 Single-phase System (8.0-12.0)

Product Name	Model	Name
SigenStor EC	SigenStor EC 8.0 SP	Sigen Energy Controller 8.0 kW Single Phase
SigenStor EC	SigenStor EC 10.0 SP	Sigen Energy Controller 10.0 kW Single Phase
SigenStor EC	SigenStor EC 12.0 SP	Sigen Energy Controller 12.0 kW Single Phase
Sigen Hybrid	Sigen Hybrid 8.0 SP	Sigen Hybrid Inverter 8.0 kW Single Phase
Sigen Hybrid	Sigen Hybrid 10.0 SP	Sigen Hybrid Inverter 10.0 kW Single Phase
Sigen Hybrid	Sigen Hybrid 12.0 SP	Sigen Hybrid Inverter 12.0 kW Single Phase

2.1.1.3 Three-phase System

Product Name	Model	Name
SigenStor EC	SigenStor EC 5.0 TP	Sigen Energy Controller 5.0 kW Three Phase
SigenStor EC	SigenStor EC 6.0 TP	Sigen Energy Controller 6.0 kW Three Phase
SigenStor EC	SigenStor EC 8.0 TP	Sigen Energy Controller 8.0 kW Three Phase
SigenStor EC	SigenStor EC 10.0 TP	Sigen Energy Controller 10.0 kW Three Phase
SigenStor EC	SigenStor EC 12.0 TP	Sigen Energy Controller 12.0 kW Three Phase
SigenStor EC	SigenStor EC 15.0 TP	Sigen Energy Controller 15.0 kW Three Phase
SigenStor EC	SigenStor EC 17.0 TP	Sigen Energy Controller 17.0 kW Three Phase
SigenStor EC	SigenStor EC 20.0 TP	Sigen Energy Controller 20.0 kW Three Phase
SigenStor EC	SigenStor EC 25.0 TP	Sigen Energy Controller 25.0 kW Three Phase
SigenStor EC	SigenStor EC 30.0 TP	Sigen Energy Controller 30.0 kW Three Phase
SigenStor EC	SigenStor EC 10.0 TP BE	Sigen Energy Controller 10.0 kW Three Phase for Belgium
SigenStor EC	SigenStor EC 30.0 TP BE	Sigen Energy Controller 30.0 kW Three Phase for Belgium
Sigen Hybrid	Sigen Hybrid 5.0 TP	Sigen Hybrid Inverter 5.0 kW Three Phase
Sigen Hybrid	Sigen Hybrid 6.0 TP	Sigen Hybrid Inverter 6.0 kW Three Phase
Sigen Hybrid	Sigen Hybrid 8.0 TP	Sigen Hybrid Inverter 8.0 kW Three Phase
Sigen Hybrid	Sigen Hybrid 10.0 TP	Sigen Hybrid Inverter 10.0 kW Three Phase
Sigen Hybrid	Sigen Hybrid 12.0 TP	Sigen Hybrid Inverter 12.0 kW Three Phase
Sigen Hybrid	Sigen Hybrid 15.0 TP	Sigen Hybrid Inverter 15.0 kW Three Phase
Sigen Hybrid	Sigen Hybrid 17.0 TP	Sigen Hybrid Inverter 17.0 kW Three Phase
Sigen Hybrid	Sigen Hybrid 20.0 TP	Sigen Hybrid Inverter 20.0 kW Three Phase
Sigen Hybrid	Sigen Hybrid 25.0 TP	Sigen Hybrid Inverter 25.0 kW Three Phase
Sigen Hybrid	Sigen Hybrid 30.0 TP	Sigen Hybrid Inverter 30.0 kW Three Phase
Sigen Hybrid	Sigen Hybrid 10.0 TP BE	Sigen Hybrid Inverter 10.0 kW Three Phase for Belgium

2.1.1.4 Low-voltage Three-phase System

Product Name	Model	Name
SigenStor EC	SigenStor EC 5.0 TPLV	Sigen Energy Controller 5.0 kW Three Phase Low Voltage
SigenStor EC	SigenStor EC 6.0 TPLV	Sigen Energy Controller 6.0 kW Three Phase Low Voltage
SigenStor EC	SigenStor EC 8.0 TPLV	Sigen Energy Controller 8.0 kW Three Phase Low Voltage
SigenStor EC	SigenStor EC 10.0 TPLV	Sigen Energy Controller 10.0 kW Three Phase Low Voltage
SigenStor EC	SigenStor EC 12.0 TPLV	Sigen Energy Controller 12.0 kW Three Phase Low Voltage
SigenStor EC	SigenStor EC 10.0 TPLV BE	Sigen Energy Controller 10.0 kW Three Phase Low Voltage Belgium
Sigen Hybrid	Sigen Hybrid 5.0 TPLV	Sigen Hybrid Inverter 5.0 kW Three Phase Low Voltage
Sigen Hybrid	Sigen Hybrid 6.0 TPLV	Sigen Hybrid Inverter 6.0 kW Three Phase Low Voltage
Sigen Hybrid	Sigen Hybrid 8.0 TPLV	Sigen Hybrid Inverter 8.0 kW Three Phase Low Voltage
Sigen Hybrid	Sigen Hybrid 10.0 TPLV	Sigen Hybrid Inverter 10.0 kW Three Phase Low Voltage
Sigen Hybrid	Sigen Hybrid 12.0 TPLV	Sigen Hybrid Inverter 12.0 kW Three Phase Low Voltage

2.1.1.5 Split-phase System

Product Name	Model	Name
SigenStor EC	SigenStor EC 4.8 SP	Sigen Energy Controller 4.8 kW Split Phase
SigenStor EC	SigenStor EC 7.6 SP	Sigen Energy Controller 7.6 kW Split Phase
SigenStor EC	SigenStor EC 11.4 SP	Sigen Energy Controller 11.4 kW Split Phase
Sigen Hybrid	Sigen Hybrid 4.8 SP	Sigen Hybrid Inverter 4.8 kW Split Phase
Sigen Hybrid	Sigen Hybrid 7.6 SP	Sigen Hybrid Inverter 7.6 kW Split Phase
Sigen Hybrid	Sigen Hybrid 11.4 SP	Sigen Hybrid Inverter 11.4 kW Split Phase

2.1.1.6 SigenStor Home US

Product Name	Model	Name
SigenStor EC US	SigenStor EC SP US	Sigen Energy Controller Split Phase for US
SigenStor EC US	SigenStor EC 11.4 SP US	Sigen Energy Controller 11.4 kW Split Phase for US

2.1.2 Battery Pack

Able to store electrical energy. Supports the simultaneous use of multiple battery pack models.

Product Name	Model	Name
SigenStor BAT	SigenStor BAT 5.0	Sigen Battery 5 kWh
SigenStor BAT	SigenStor BAT 6.0	Sigen Battery 6 kWh
SigenStor BAT	SigenStor BAT 6.0 US	Sigen Battery 6 kWh US
SigenStor BAT	SigenStor BAT 8.0	Sigen Battery 8 kWh
SigenStor BAT	SigenStor BAT 9.0 US	Sigen Battery 9 kWh US
SigenStor BAT	SigenStor BAT 10.0	Sigen Battery 10 kWh

2.1.3 CT Sensor

Equipped with grid connection point data collection to achieve zero-power grid connection functionality. This product is only used in split-phase system inverters.

Product Name	Model	Name
CT Sensor	CT-EC	External CT

2.1.4 Power Sensor

Equipped with grid connection point data collection to achieve zero-power grid connection functionality.

Product Name	Model	Name
Power Sensor	Sigen Sensor SP-DH(SDM230Modbus)	Sigen Power Sensor Single Phase DH
Power Sensor	Sigen Sensor SP-CT120-DH(SDM120CT 40mA)	Sigen Power Sensor Single Phase External CT 120 A DH
Power Sensor	Sigen Sensor TP-DH(SDM630MODBUS V2)	Sigen Power Sensor Three Phase DH
Power Sensor	Sigen Sensor TP-CT120-DH(SDM630MCT 40mA/120A)	Sigen Power Sensor Three Phase External CT 120 A DH
Power Sensor	Sigen Sensor TP-CT300-DH(SDM630MCT 40mA/300A)	Sigen Power Sensor Three Phase External CT 300 A DH
Power Sensor	Sigen Sensor TP-CT600-DH(SDM630MCT V2/600A)	Sigen Power Sensor Three Phase External CT 600 A DH

2.1.5 Communication Module

If it's used with our inverters, the communication between inverters and management systems should be realized through 4G.

Product code	Model	Name
CommMod	Sigen CommMod	Sigen Communication Module

2.1.6 Sigen Backup Switch

For grid-connected and off-grid switching, grid-side power monitoring, and grid voltage sampling.

Product code	Model	Name
Backup Switch	Sigen Backup Switch	Sigen Backup Switch

2.2 Product Appearance

2.2.1 Appearance and Dimensions

Inverter and Battery Pack

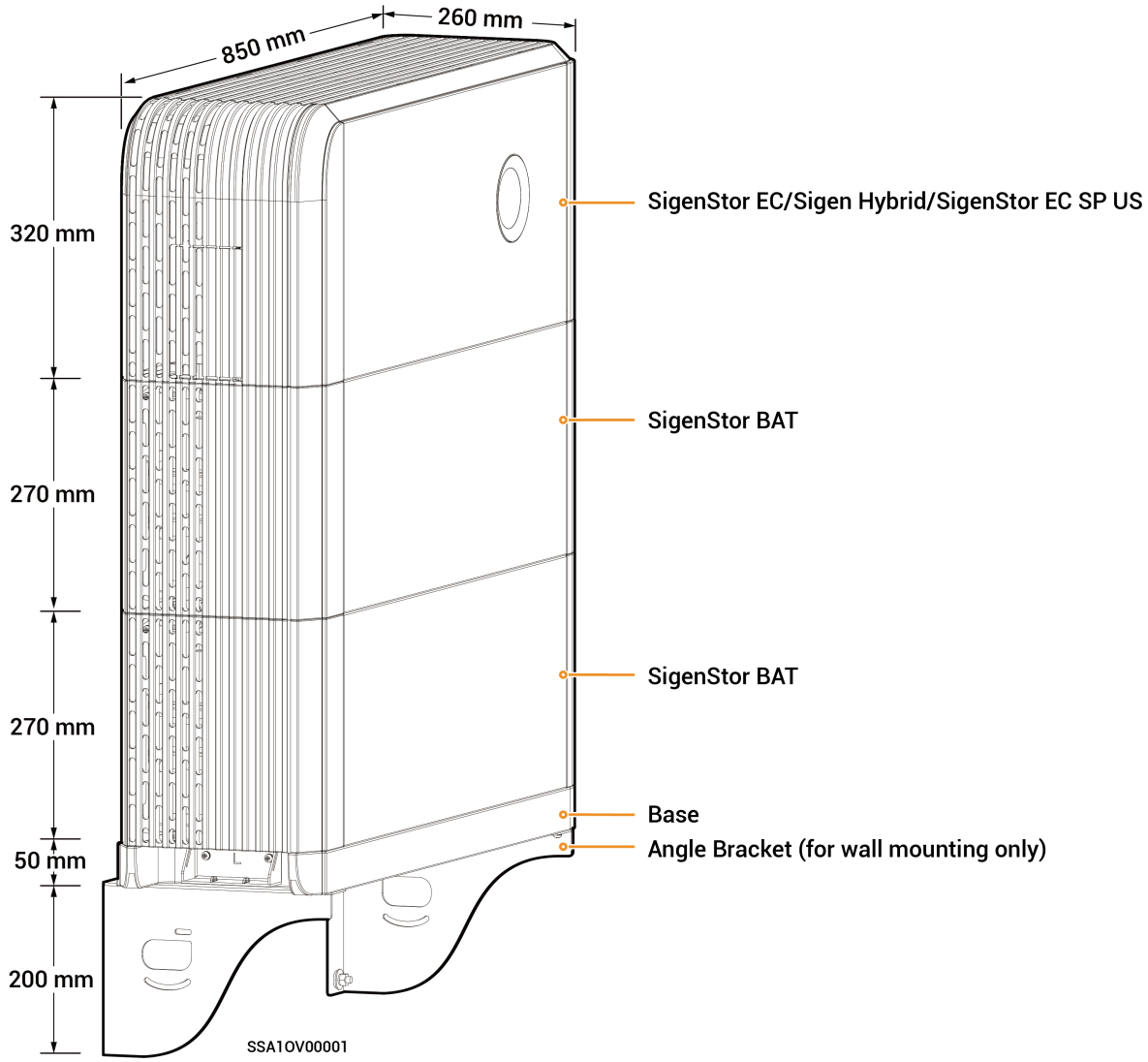

CommMod

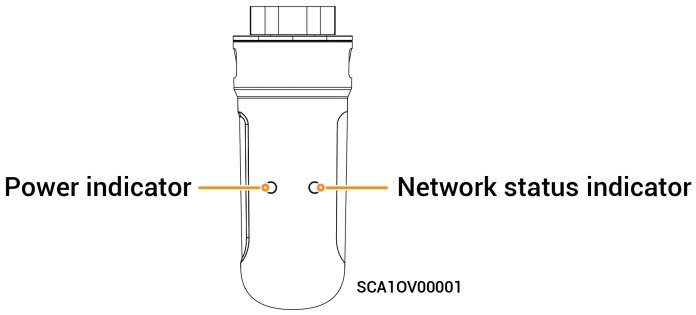

Sigen Backup Switch

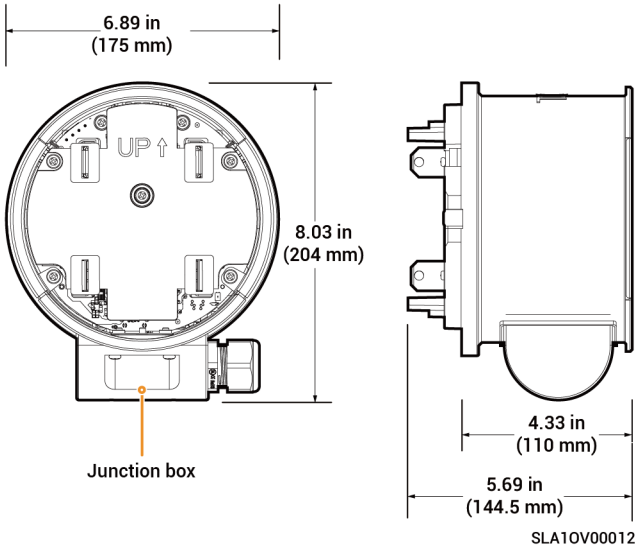

2.2.2 Port Introduction

2.2.2.1 Single-phase System (3.0-6.0) Inverter Left View

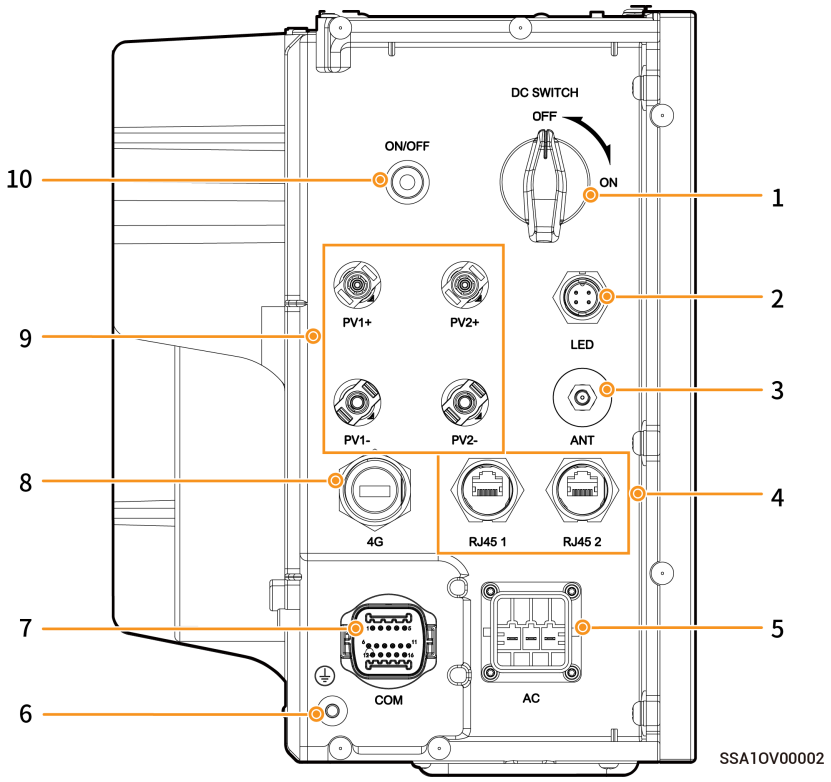

No.	Name	Marking
1	DC switch	DC SWITCH
2	Decorative cover strip light interface	LED
3	Antenna interface	ANT
4	Network cable interface	RJ45 1/ RJ45 2
5	AC output interface	AC
6	Grounding screw	-
7	RS-485 communication interface	COM
8	CommMod interface	4G
9	DC input interface	PV1+/PV2+/ PV1-/PV2-
10	Power button	ON/OFF

2.2.2.2 Single-phase System (8.0-12.0) Inverter Left View

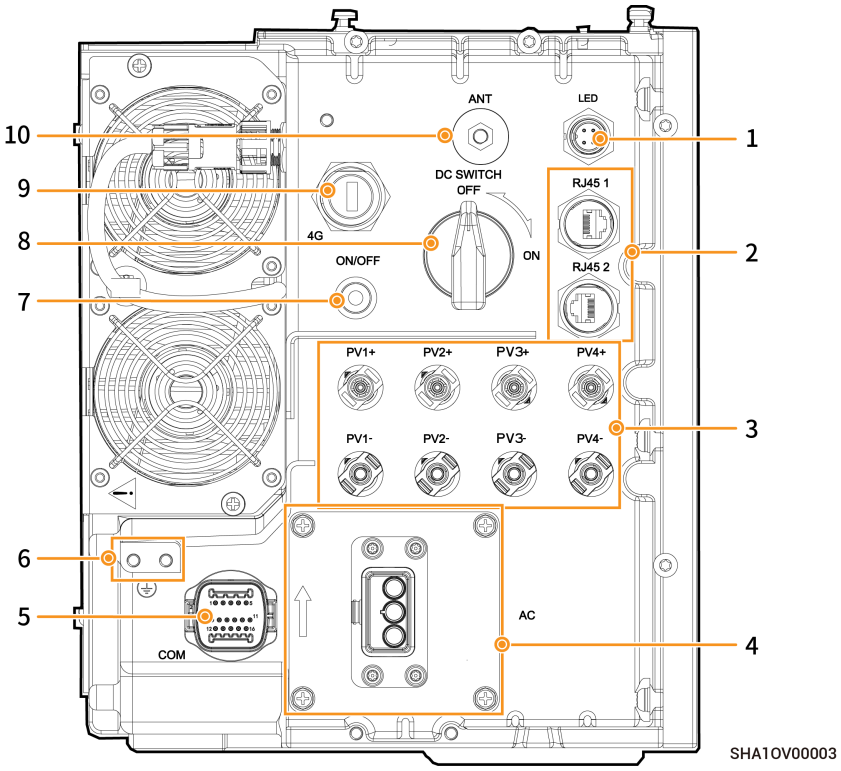

No.	Name	Marking
1	Decorative cover strip light interface	LED
2	Network cable interface	RJ45 1/ RJ45 2
3	DC input interface	PV1+/PV2+/PV3+/PV4+/PV1-/PV2-/PV3-/PV4-
4	AC output interface	AC
5	Communication interface	COM
6	Grounding screw	-
7	Power button	ON/OFF
8	DC switch	DC SWITCH
9	Sigen CommMod interface	4G
10	Antenna interface	ANT

2.2.2.3 Three-phase System Inverter Left View

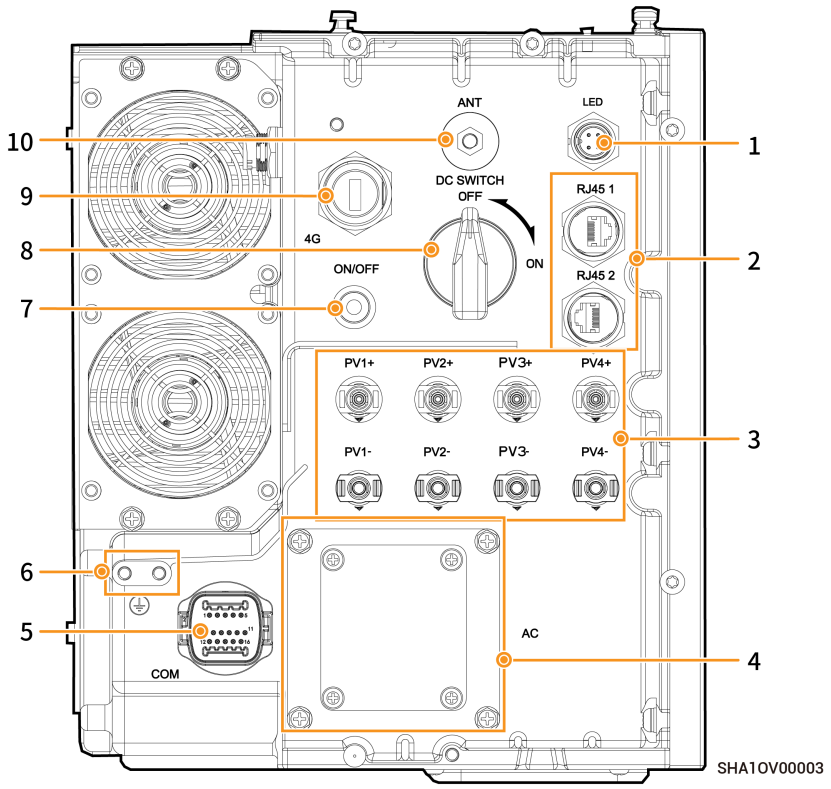

No.	Name	Marking
1	Decorative cover strip light interface	LED
2	Network cable interface	RJ45 1/ RJ45 2
3	DC input interface	PV1+/PV2+/ PV3+/PV4+/ PV1-/PV2-/ PV3-/PV4-
4	AC output interface	AC
5	Communication interface	COM
6	Grounding screw	-
7	Power button	ON/OFF
8	DC switch	DC SWITCH
9	Sigen CommMod interface	4G
10	Antenna interface	ANT

2.2.2.4 Low-voltage Three-phase System Inverter Left View

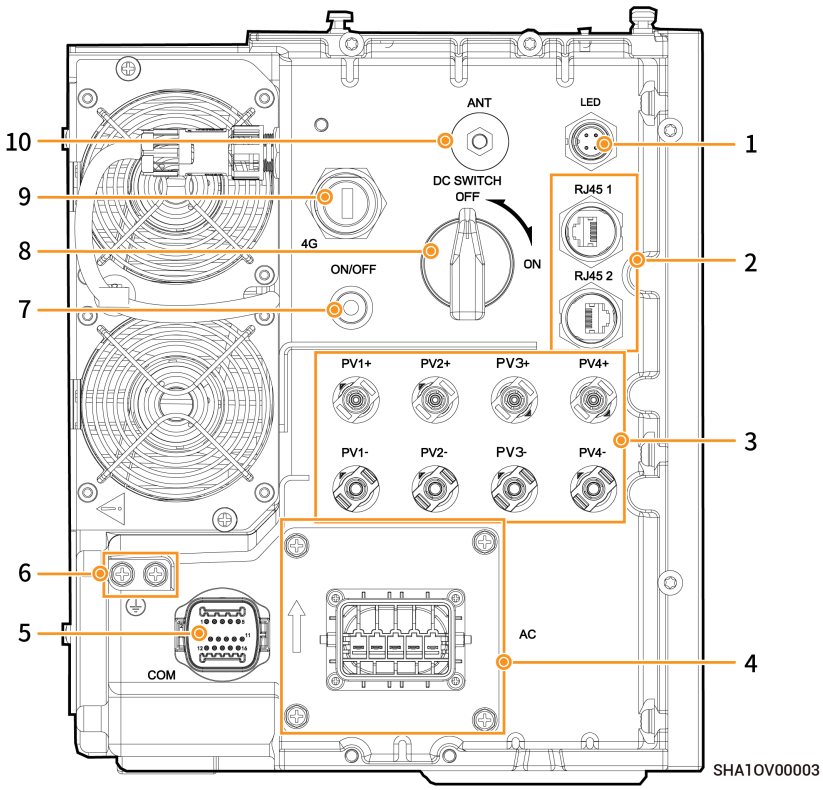

No.	Name	Marking
1	Decorative cover strip light interface	LED
2	Network cable interface	RJ45 1/ RJ45 2
3	DC input interface	PV1+/PV2+/ PV3+/PV4+/ PV1-/PV2-/ PV3-/PV4-
4	AC output interface	AC
5	Communication interface	COM
6	Grounding screw	-
7	Power button	ON/OFF
8	DC switch	DC SWITCH
9	Sigen CommMod interface	4G
10	Antenna interface	ANT

2.2.2.5 Split-phase System Inverter Left View

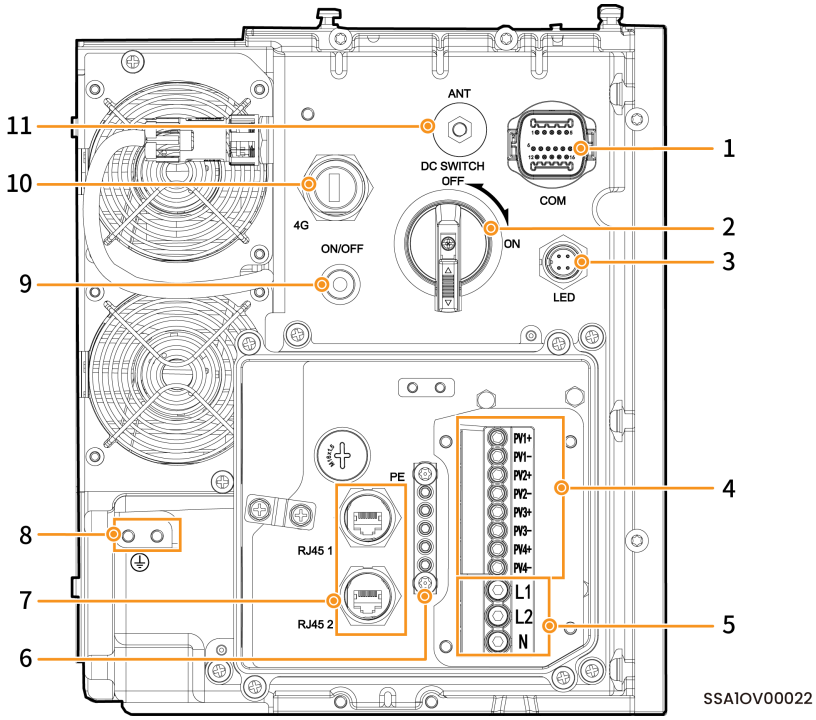

No.	Name	Marking
1	Communication interface	COM
2	DC switch	DC SWITCH
3	Decorative cover strip light interface	LED
4	DC terminal block	PV1+/PV1-/PV2+/PV2-/PV3+/PV3-/PV4+/PV4-
5	AC terminal block	L1/L2/N
6	Grounding aluminum busbar	-
7	Network cable interface	RJ45 1/RJ45 2
8	Grounding screw	-
9	Power button	ON/OFF
10	(Reserved) CommMod interface	4G
11	Antenna interface	ANT

2.2.2.6 Sigen Backup Switch Bottom view

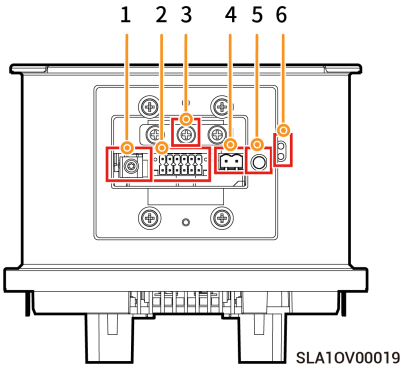

S/N	Name
1	Manual lever
2	Signal Port
3	Grounding screw
4	12V Power Port
5	Reset button
6	Indicator

2.3 Label Description

Symbols	Definition
	Danger! High Voltage. High voltage exists inside the equipment when powered on. Do not open the casing when the equipment is running. Any maintenance or servicing operations must be performed by trained and skilled electrical engineers.
	Warning! Life at risk. The equipment has potential hazards after running. Take proper protection when operating the equipment.
	After the equipment is powered off, internal components discharge in a delay time. Wait for the duration according to the delay time on the label until the equipment is fully discharged.
	Warning! Risk of burns. The surface of the heat dissipation area is hot when the equipment is running. Do not touch it to avoid burns.
	Please refer to the instructions to operate the equipment.
	Earthing mark.

2.4 Grid power supply mode

2.4.1 Single-phase System

- Supported grid power modes are TN-S, TN-C, TN-C-S, and TT.
- When applied to the TT grid power mode, the voltage requirement for N to PE is less than 30V.

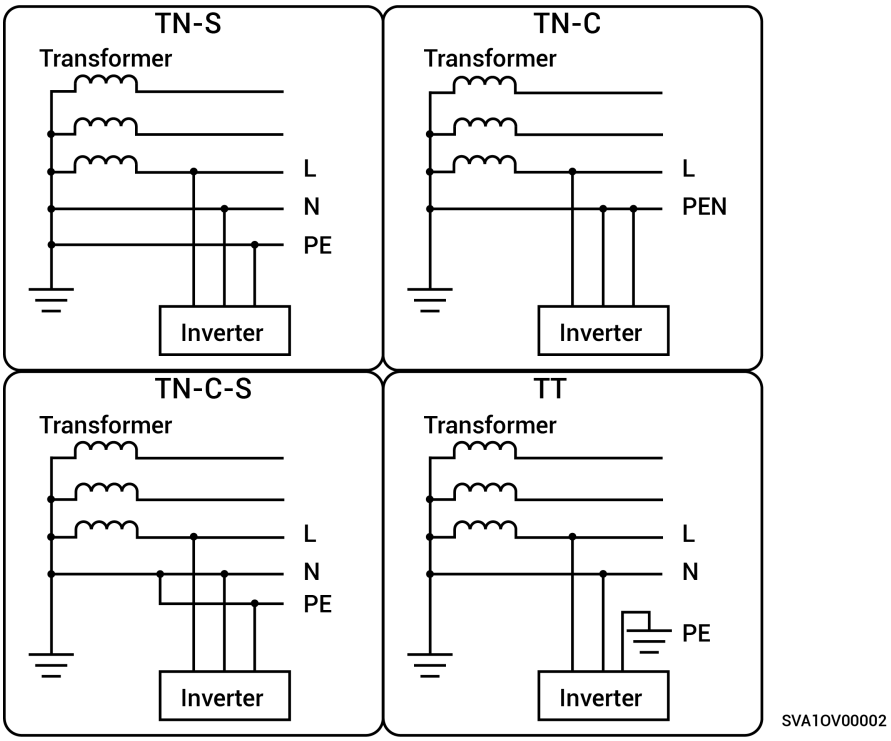

2.4.2 Three-phase System

- Supported grid power modes are TN-S, TN-C, TN-C-S, TT, and IT.
- When applied to the TT grid power mode, the voltage requirement for N to PE is less than 30V.

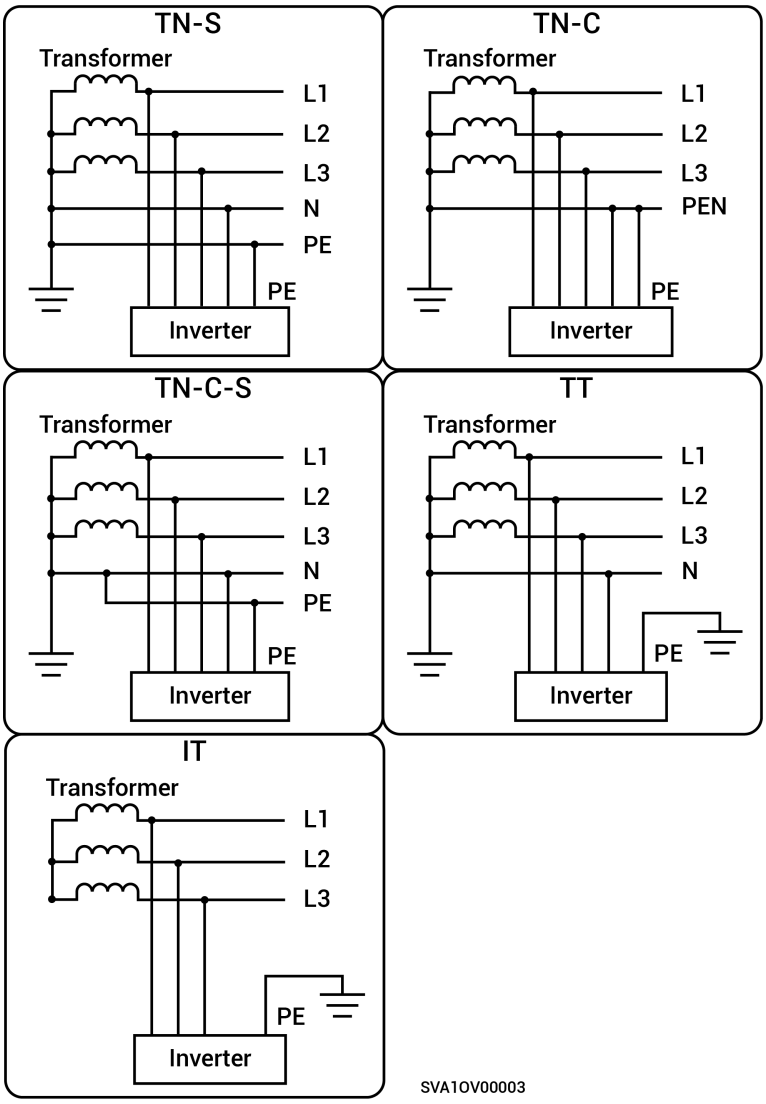

2.4.3 Low-voltage Three-phase System

The grid power mode supported by the product is Delta Grid:

Delta Grid

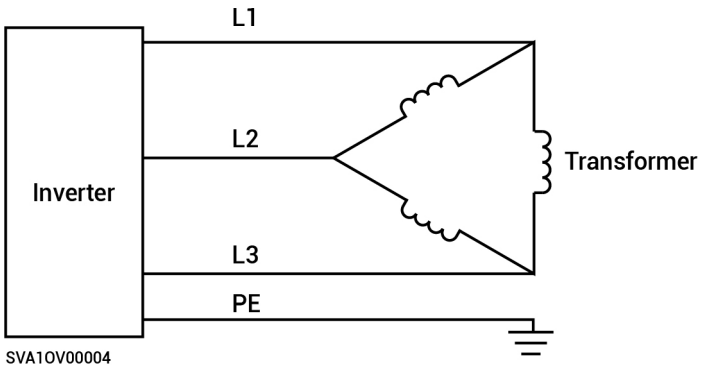

2.4.4 Split-phase System

- Supported grid power modes are TN-S and TT.
- When applied to the TT grid power mode, the voltage requirement for N to PE is less than 30V.

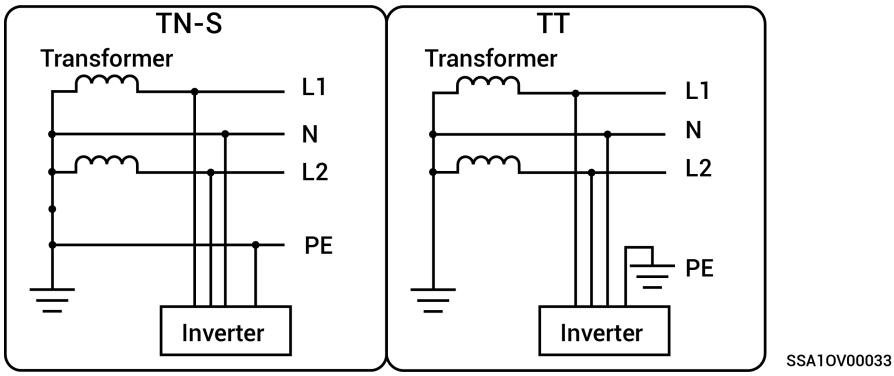

2.5 Introduction to system wiring

- our company's products can be used for Home energy storage system. The Home energy storage system consists of photovoltaic panels, inverters, battery packs, master control switches, Gateway, loads, power grids, etc.
- The main function of Home energy storage system is to store the direct current generated by photovoltaic panels into battery packs. Or alternatively, the electricity in the photovoltaic system and the battery pack can be converted into alternating current for use by the load or incorporated into the grid.

Tips

- Under backup power system wiring, the duration of off-grid operation of the backup power load is related to the power supply capacity of the PV storage system. If there is an abnormality in the power supply of the PV storage system during off-grid operation (including but not limited to abnormal PV power generation, insufficient battery power, and abnormal power supplies to the diesel generator), the backup power load will still be unable to operate.
- Low-voltage Three-phase system Home Series products does not support backup scenarios, and only the Non-backup system wiring diagram is available.

Whole home backup system wiring diagram

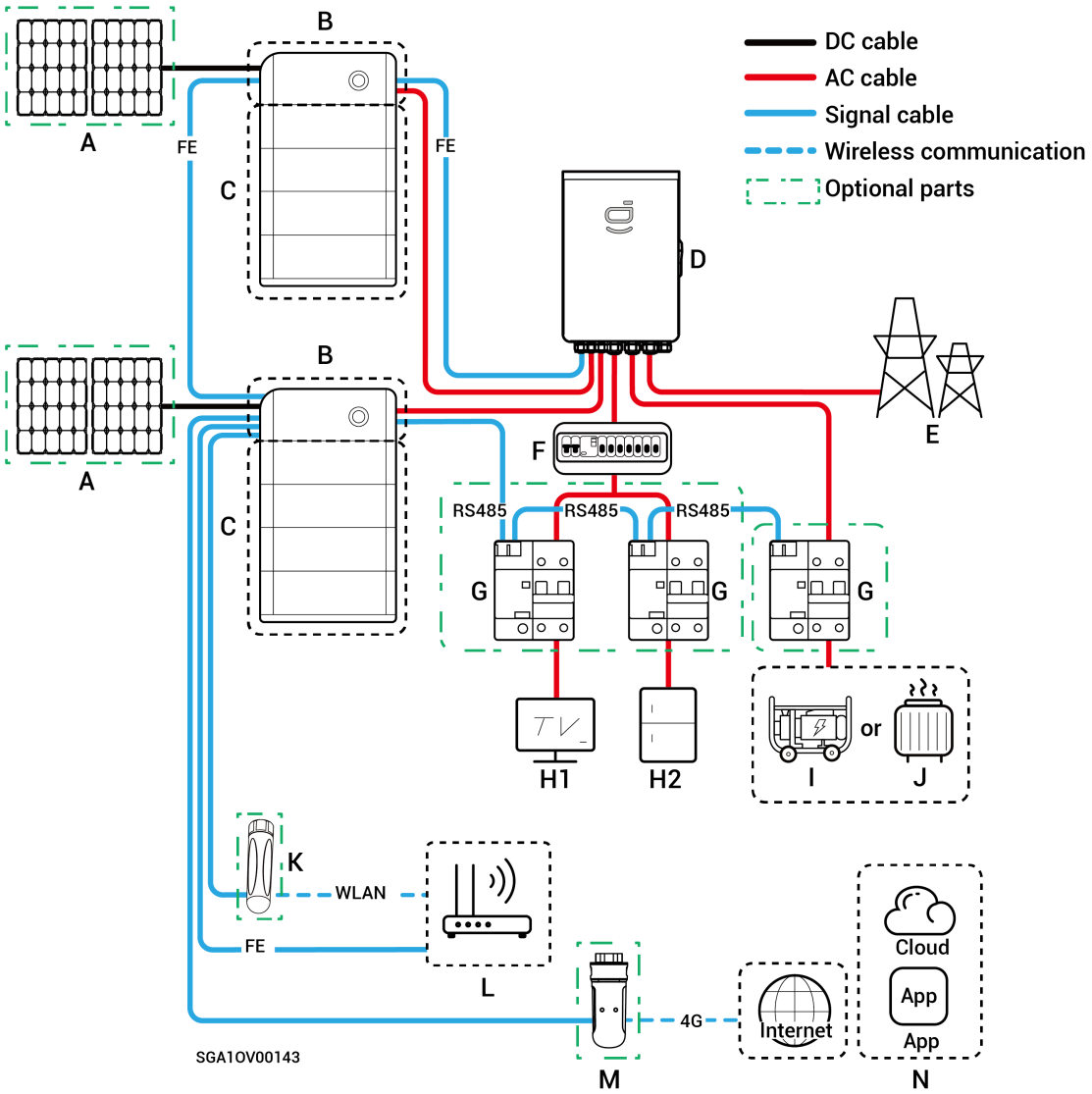

A. PV panel	B. SigenStor EC/Sigen Hybrid	C. SigenStor BAT	D. Gateway
E. Power grid	F. Backup Distribution panel	G. Smart miniature circuit breaker	H1/H2. Backup Household loads
I. Generator	J. Smart loads	K. Antenna	L. Router
M. CommMod	N. mySigen		

Tips

- No more than 20 SigenStor units can be cascaded.
- When B is Sigen Hybrid, C(SigenStor BAT) is optional.
- If H1/H2(backup household load) experiences leakage, it may pose a risk of electric shock. In order to avoid this hazard, a residual current device (RCD) must be installed between D(Gateway) and H1/H2(backup household load).

Tips

- As a backup energy source for long-term off-grid applications, the diesel generator can work in tandem with the Gateway to provide a smooth transition between PV, storage and diesel generation.
- All the power equipment in the owner's home can be connected as smart loads. To ensure that this product maximizes the benefits to users, it is recommended that the high-power equipment be connected as smart loads (heat pumps, pool heaters, clothes dryers, etc.), which can be cut off when the energy storage system has low power. Other low-power equipment are connected as household loads (lights, routers, etc.)
- It is recommended to use Fast Ethernet and WLAN for communication with inverters. When free 4G traffic of CommMod runs out, users must top up their accounts or replace an SIM card.

Partial home backup system wiring diagram

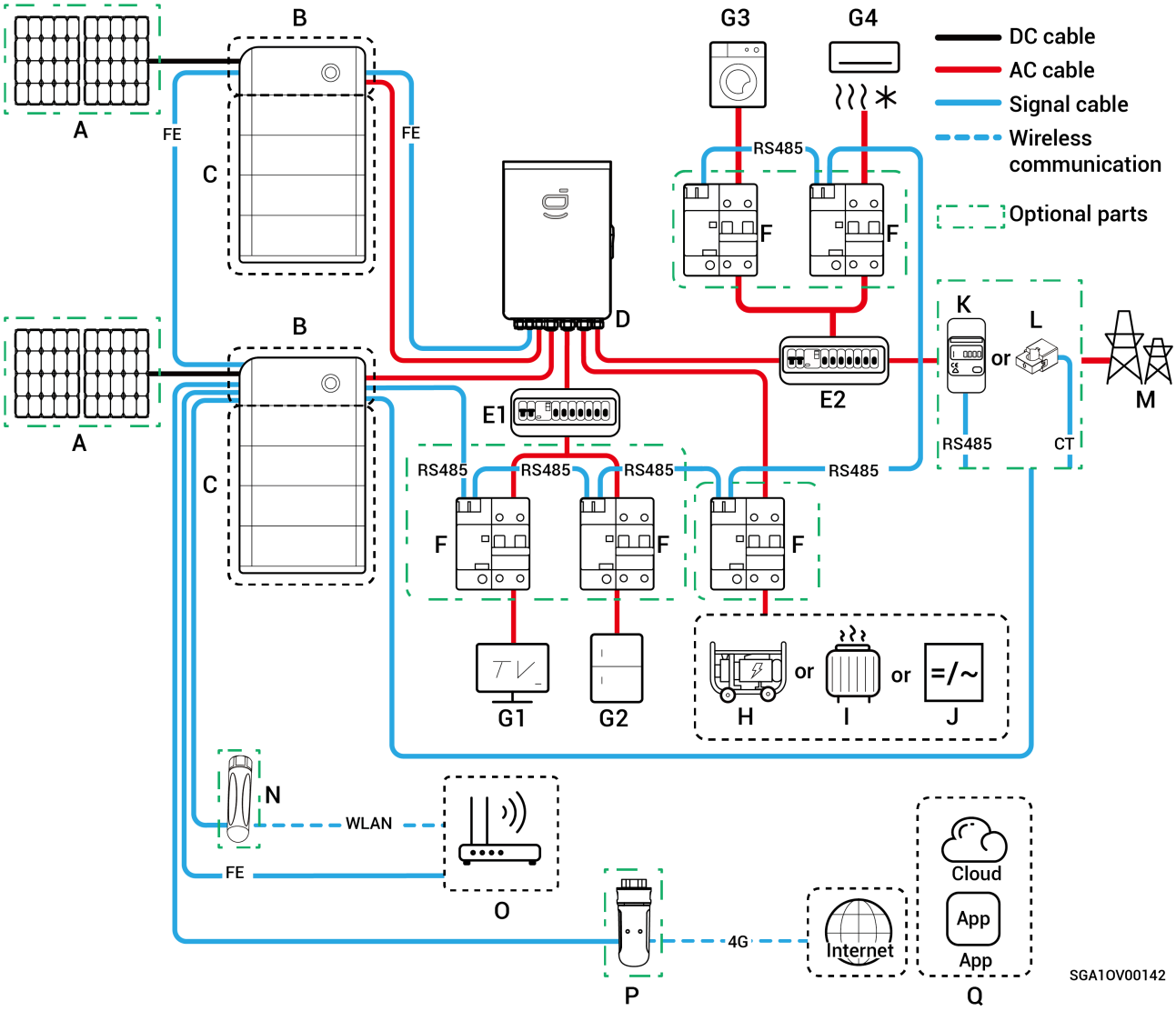

A. PV panel	B. SigenStor EC/Sigen Hybrid	C. SigenStor BAT	D. Gateway
E1. Backup Distribution panel	E2. Non-Backup Distribution panel	F. Smart miniature circuit breaker	G1/G2. Backup Household loads
G3/G4. Non-Backup Household loads	H. Generator	I. Smart loads	J. Third-party inverter
K. Power sensor	L. CT sensor	M. Power grid	N. Antenna
O. Router	P. CommMod	Q. mySigen	

Tips

- No more than 20 SigenStor units can be cascaded.
- When B is Sigen Hybrid, C(SigenStor BAT) is optional.
- If E2(non-backup distribution panel) features leakage protection, it is recommended that the rated residual operating current be greater than or equal to the number of inverters × 100 mA.
- If G1/G2(backup household load) experiences leakage, it may pose a risk of electric shock. In order to avoid this hazard, a residual current device (RCD) must be installed between the D(Gateway) and the G1/G2(backup household load).
- As a backup energy source for long-term off-grid applications, the diesel generator can work in tandem with the Gateway to provide a smooth transition between PV, storage and diesel power generation.
- All the power equipment in the owner's home can be connected as smart loads. To ensure that this product maximizes the benefits to users, it is recommended that the high-power equipment be connected as smart loads (heat pumps, pool heaters, clothes dryers, etc.), which can be cut off when the energy storage system has low power. Other low-power equipment are connected as household loads (lights, routers, etc.)The maximum power of the immersion heater shall not be greater than 17.6 kW/80 A.
- Power sensor has the function of data acquisition for grid connection points enables zero-power grid connection.
  - For partial home backup system wiring, Power sensor does not need to be configured.
  - For partial backup power and zero-power grid connection control system wiring, Power sensor is configured.
- Only the split-phase system uses CT sensors. The CT sensor supports grid connection point data collection to achieve zero-power grid connection functionality.
  - The CT sensor may not be required in the case of partial backup power.
  - When partial backup power + zero-power grid connection control is applied, the CT sensor must be configured.
- It is recommended to use Fast Ethernet and WLAN for communication with inverters. When free 4G traffic of CommMod runs out, users must top up their accounts or replace an SIM card.
- For detailed information on the smart miniature circuit breaker, please refer to Sigen Smart Breaker Integration Guide .

Non-backup system wiring diagram

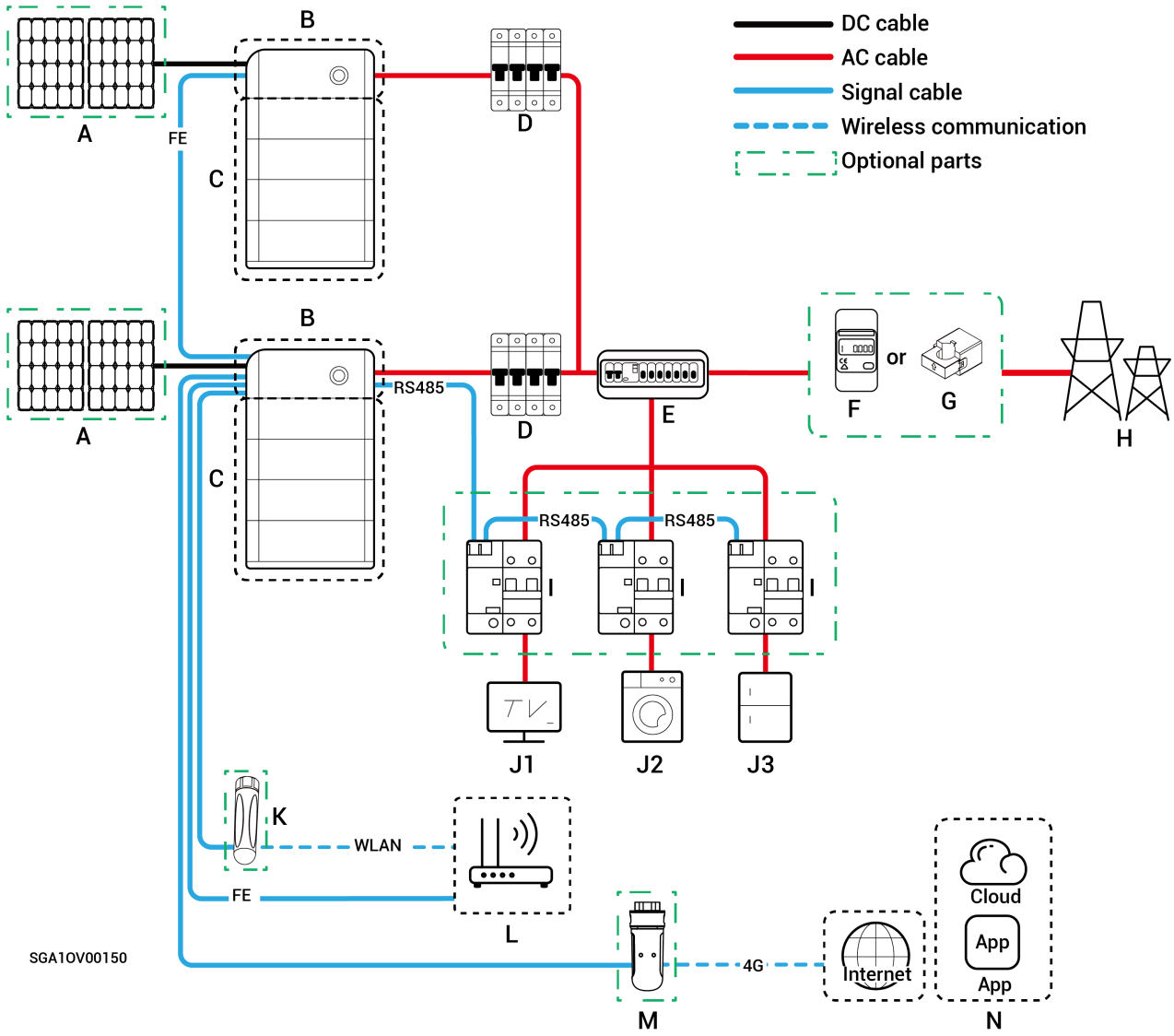

A. PV panel	B. SigenStor EC/Sigen Hybrid	C. SigenStor BAT	D. AC switch
E. Distribution panel	F. Power sensor	G. CT sensor	H. Power grid
I. Smart miniature circuit breaker	J1/J2/J3. Household loads	K. Antenna	L. Router
M. CommMod	N. mySigen		

Tips

- No more than 20 SigenStor units can be cascaded.
- When B is Sigen Hybrid, C(SigenStor BAT) is optional.
- The rated voltage of the AC switch connected to each single-phase system inverter must be ≥ 240 Va.c., and the recommended rated current specifications are:
  - SigenStor EC/Sigen Hybrid (3.0-4.0) SP: Rated current is 25 A.

Tips

- SigenStor EC/Sigen Hybrid (4.6-6.0) SP: Rated current is 40 A.
- SigenStor EC/ Sigen Hybrid 8.0 SP: Rated current is 50 A.
- SigenStor EC/ Sigen Hybrid (10.0-12.0) SP: Rated current is 60 A.

- The rated voltage of the AC switch connected to each three-phase system inverter must be ≥ 380 Va.c., and the recommended rated current specifications are:
  - SigenStor EC/Sigen Hybrid (5.0-8.0) TP: Rated current is 25 A.
  - SigenStor EC/Sigen Hybrid (10.0-15.0) TP: Rated current is 32 A.
  - SigenStor EC/Sigen Hybrid (17.0-20.0) TP: Rated current is 40 A.
  - SigenStor EC/Sigen Hybrid 25.0 TP: Rated current is 50 A.
  - SigenStor EC/Sigen Hybrid 30.0 TP: Rated current is 63 A.
- The rated voltage of the AC switch connected to each low-voltage three-phase system inverter must be ≥ 230 Va.c., and the recommended rated current specifications are:
  - SigenStor EC/Sigen Hybrid (5.0, 6.0) TPLV: Rated current is 25 A.
  - SigenStor EC/Sigen Hybrid 8.0 TPLV: Rated current is 32 A.
  - SigenStor EC/Sigen Hybrid 10.0 TPLV: Rated current is 40 A.
  - SigenStor EC/Sigen Hybrid 12.0 TPLV: Rated current is 50 A.
- The rated voltage of the AC switch connected to each split-phase system inverter must be ≥ 240 Va.c., and the recommended rated current specifications are:
  - SigenStor EC/Sigen Hybrid 4.8 SP: Rated current is 25 A.
  - SigenStor EC/Sigen Hybrid 7.6 SP: Rated current is 40 A.
  - SigenStor EC/Sigen Hybrid 11.4 SP: Rated current is 63 A.
- If E (distribution panel) features leakage protection, it is recommended that the rated residual operating current be greater than or equal to the number of inverters × 100 mA, the rated current of the AC switch of the distribution panel must be: ≥ the maximum output current of an inverter × the number of inverters in parallel connection × 1.25[1].
  - The rated voltage of the AC switch of the distribution panel of the single-phase system inverter must be ≥ 240 Va.c.
  - The rated voltage of the AC switch of the distribution panel of the three-phase system inverter must be ≥ 380 Va.c.
  - The rated voltage of the AC switch of the distribution panel of the low-voltage three-phase system inverter must be ≥ 230 Va.c.
  - The rated voltage of the AC switch of the distribution panel of the split-phase system inverter must be ≥ 240 Va.c
- The power sensor features data collection at the grid connection point to achieve zero-power grid connection.
  - When backup power is only available for part of the loads, the power sensor is not required.
  - When partial backup power is combined with zero-power grid connection, the power sensor must be configured.
- Only the split-phase system uses CT sensors. The CT sensor supports grid connection point data collection to achieve zero-power grid connection functionality.
  - The CT sensor may not be required in the case of partial backup power.

Tips

- When partial backup power + zero-power grid connection control is applied, the CT sensor must be configured.
- It is recommended to use Fast Ethernet and WLAN for communication with inverters. When free 4G traffic of CommMod runs out, users must top up their accounts or replace an SIM card.
- For detailed information on the smart miniature circuit breaker, please refer to Sigen Smart Breaker Integration Guide .

Note [1]: The maximum output current of an inverter can be found in its respective data sheet.

Chapter 3 Site Selection Requirements

Tips

- The equipment can be installed indoors and outdoors. Install the equipment in strict accordance with installation instructions given in this section and local laws and regulations.
- Before installing the equipment, please be sure to carefully read the following installation requirements. The company will not be liable for any functional abnormalities or damages arising from the operation of the equipment if the installation requirements are not followed, even in cases leading to personal safety incidents.
- During actual installation, the selection of the installation location should comply with local regulations, firefighting regulations, and other relevant laws. The specific installation location planning should be subject to the installer or engineering, procurement, and construction (EPC) contracts.

Installation Environment Requirements

- Do not install the equipment in a smoky, flammable, or explosive environment.
- Avoid exposing the equipment to direct sunlight, rain, standing water, snow, or dust. It is suggested to install the equipment in a sheltered place. Take preventive measures in operating areas prone to natural disasters such as floods, mudslides, earthquakes, and typhoons.
- Do not install the equipment in an environment with strong electromagnetic interference.
- The temperature and humidity of the installation environment should meet equipment requirements.
- The equipment should be installed in an area that is at least 500 m away from corrosion sources that may result in salt damage or acid damage. Corrosion sources include but are not limited to seaside, thermal power plants, chemical plants, smelters, coal plants, rubber plants, and electroplating plants.
- In areas with good marine environments (such as Norway, where the nearshore salinity is ≤ 28 psu), the mounting distance of the device from the coastline can be appropriately relaxed to ≥ 200 m.
- If the outer surface of the device is damaged, please repaint the device in time.

Installation Position Requirements

- Do not tilt the equipment or place it upside down. Ensure that the equipment is horizontally installed.
- Do not install the equipment in areas easily accessible to children.
- Do not install the equipment in a place with fire hazards or is prone to moisturizing.
- The equipment produces sound when it is operating. Please install the equipment in a place with appropriate distance at which there is no impact to daily work and life.

- Do not install the equipment in a sealed, poorly ventilated location without fire protection measures and inaccessible for firefighters.
- The equipment is hot when it is operating. If the equipment is installed indoors, please ensure good indoor ventilation and avoid significant indoor temperature rise by more than 3°C while the equipment is operating. Otherwise, the equipment will be derated.
- Do not install the equipment in mobile scenarios such as recreational vehicles, cruise ships, and trains.
- It is recommended to install the equipment in a location where you can easily access, install, operate, and maintain it, and view the indicator status.
- Do not place the equipment in the vehicle passage when installed in a garage to avoid collisions.

Mounting Surface Requirements

- Do not install the equipment on a flammable base.
- The installation base should meet the load-bearing requirement. Solid brick-concrete structures, concrete walls, and floors are recommended.
- The installation base should be flat, and the installation area should meet the installation space requirements.
- No plumbing or electrical alignments are allowed inside the installation base to avoid potential drilling hazards during equipment installation.
- The equipment base is made of aluminum. If the equipment is installed on a metallic substrate that is prone to electrochemical corrosion (such as high-chromium stainless steel, austenitic stainless steel, and nickel-plated steel), insulating gaskets must be fully installed between the equipment and the substrate. (Non-metallic insulating gaskets such as PC, PTFE, or PVDF can be used)

Tips

To ensure optimal performance of the device, it is suggested that the installation distance between the device and surrounding obstacles be planned with reference to the diagram. If the installation site is well-ventilated, the optimal solution may be deployed based on actual conditions.

≤ 12.0kW Models Installation Recommendations

Applicable to single-phase system, three-phase System and low-voltage three-phase system:

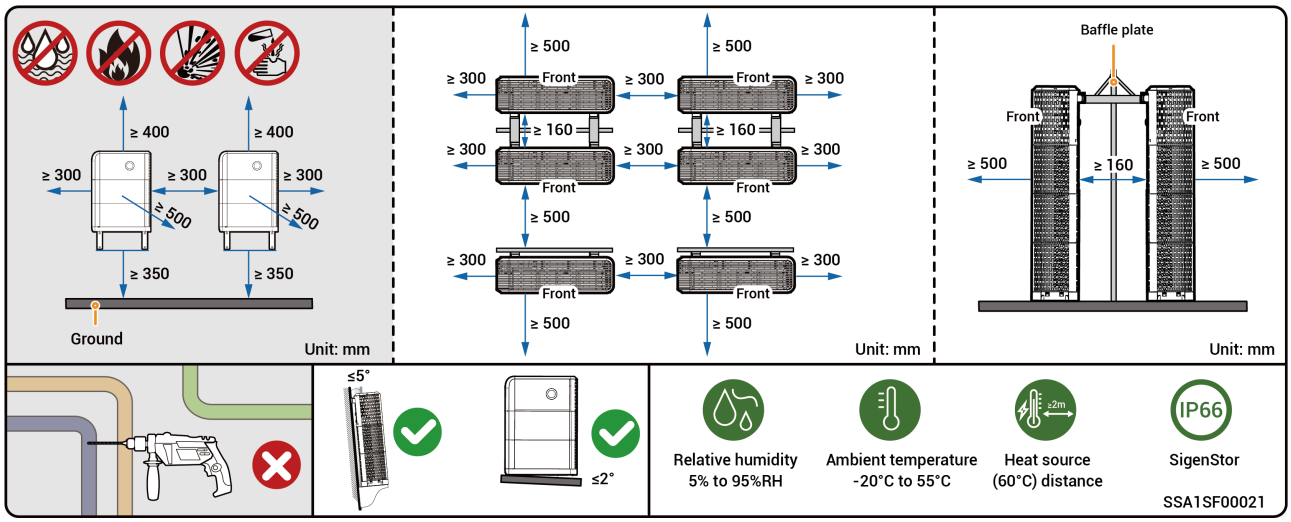

Applicable to split-phase system, including SigenStor Home US:

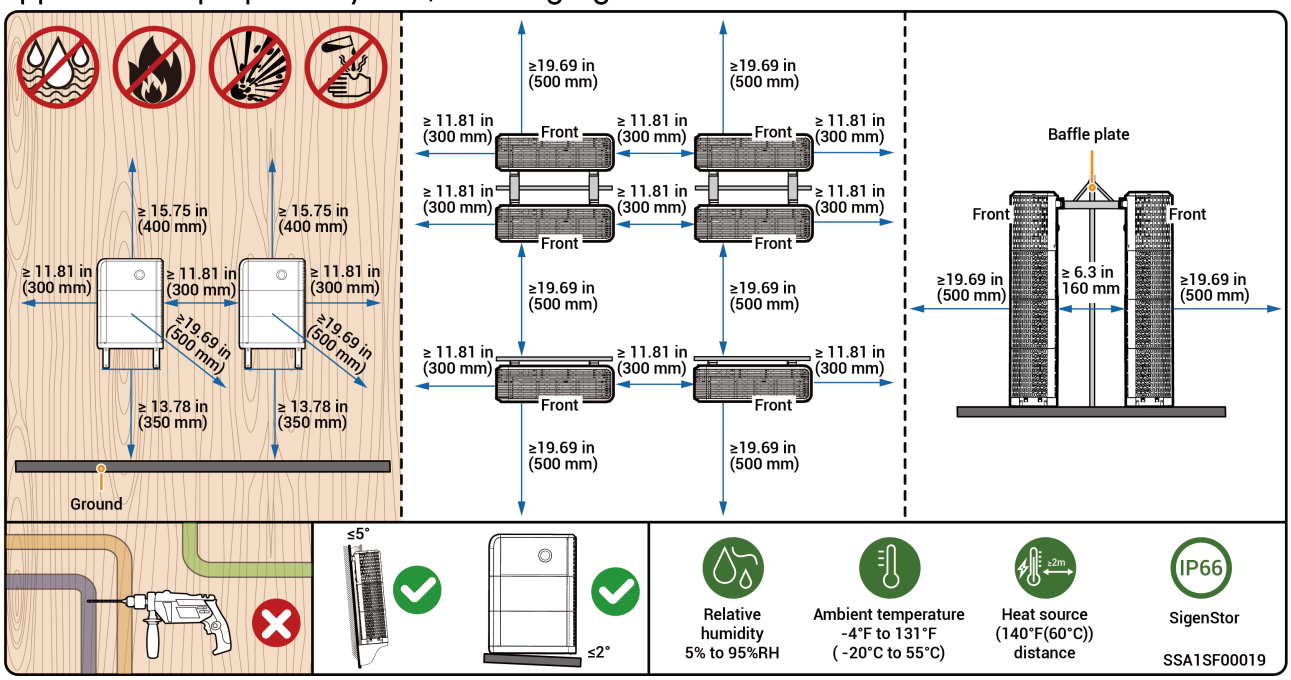

> 12.0kW Models Installation Recommendations

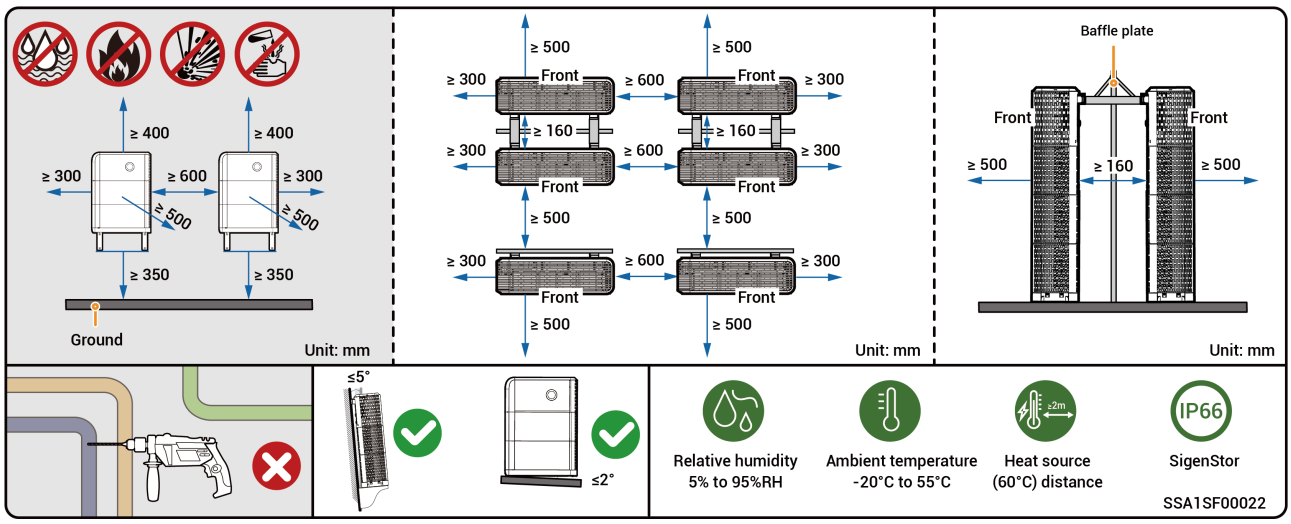

Tips

- The maximum operating temperature range applicable to the equipment is -20°C to 55°C, and the recommended optimal operating temperature range is 10°C ≤ T ≤ 35°C.
- When the battery pack temperature is below 0°C, immediate charging is not possible, and the battery pack (the built-in heating module can be automatically enabled) will activate the heating feature automatically. The best charging performance of the battery can be achieved after heating for less than 2 h. The heating feature will consume power.
- At a temperature > 40°C, the operation of the equipment may trigger a power derating that prevents the equipment from operating optimally. The higher the temperature, the shorter the service life of the equipment.

Chapter 4 Equipment Installation and Wiring

- Only company authorized personnel should install and connect the equipment. For detailed operation methods, please refer to the installation guide corresponding to the device model.
- Parts and accessories supplied with the packing box are personal assets of the owner and must be kept safe.

Chapter 5 System Operation

5.1 Operational Mode

Tips

The energy storage system supports multiple working modes, Some countries support Load Shedding Mode and VPP Scheduling-evergen Mode, which is subject to the App interface display.

Sigen AI Mode

By obtaining local peak and valley electricity prices and weather data, combined with user electricity consumption habits, the Sigen AI Mode can customize intelligent electricity usage solutions to maximize customers' cost savings.

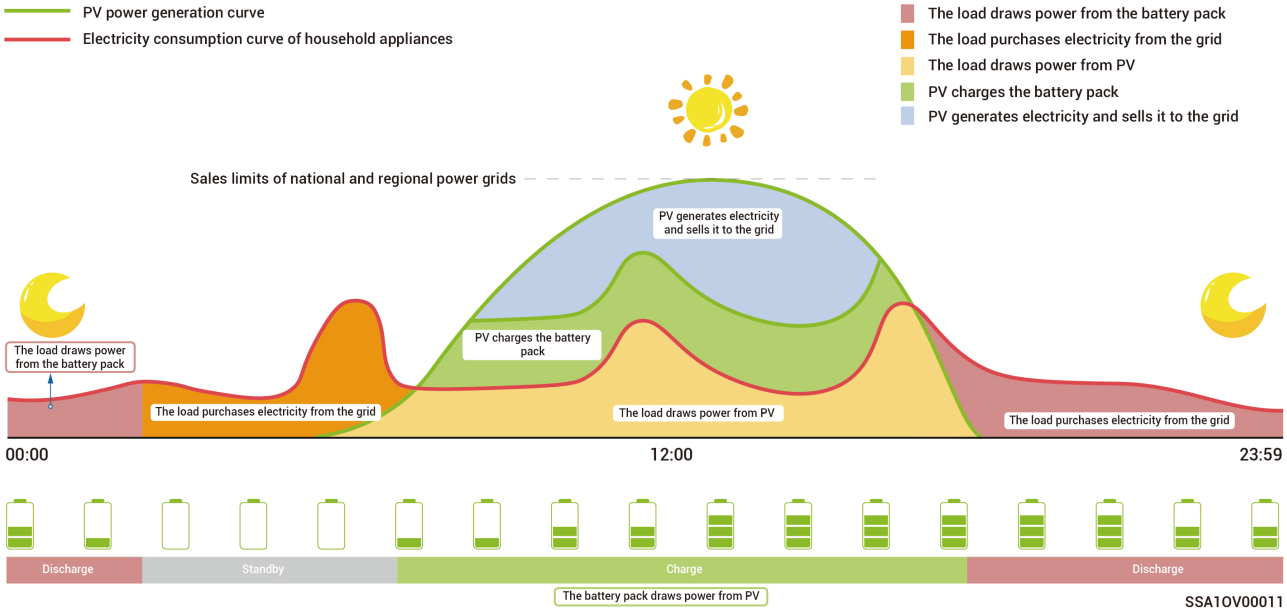

Self-Consumption Mode

- When there is sufficient solar power, the electric energy generated by the PV system will first be used to power the loads, with any excess energy being stored in the batteries. Any remaining surplus energy will be sold to the grid. When there is insufficient solar power, the batteries will release electric energy to loads. By increasing the self-consumption ratio of the PV system and improving the self-sufficiency ratio of household energy, you can effectively save on your electric bills.
- This mode is suitable for areas with high electricity prices or zero-power grid connection restrictions.

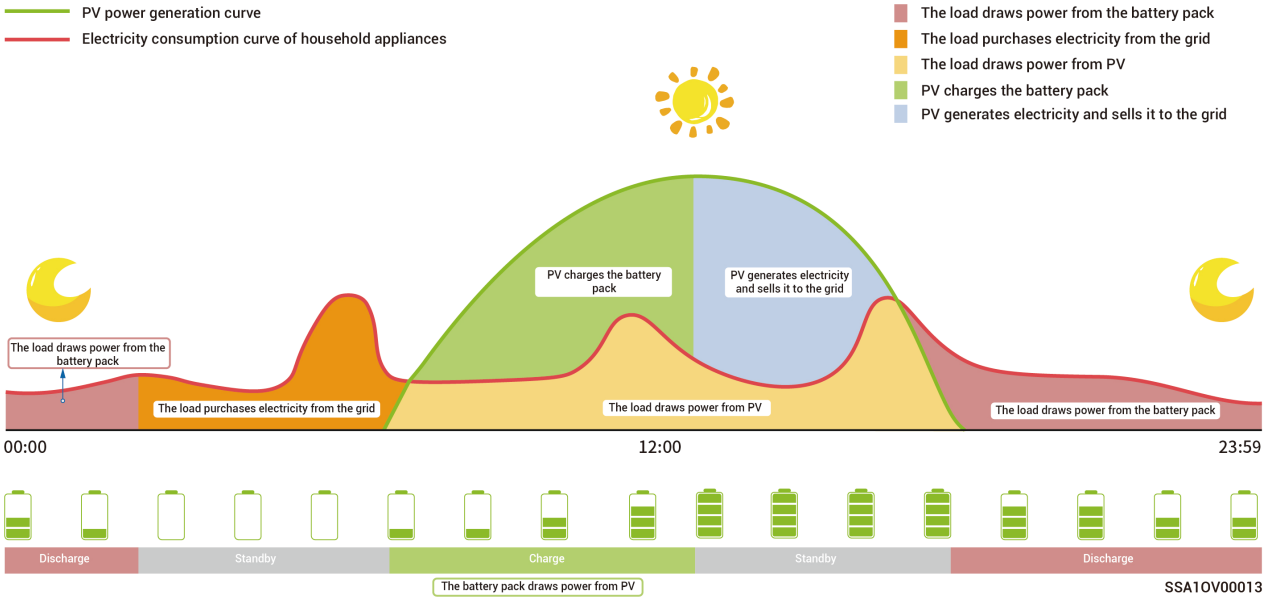

Time-based Control Mode

- The charging period, discharging period, and self-consumption period need to be set manually.When electricity prices are high, the surplus power from photovoltaic power generation and battery power can be sold to the grid, and the battery can be charged during periods of low electricity prices to save electricity bills.
- If no period is set, the energy storage system will be in standby mode without discharging. The photovoltaic power will prioritize supplying the load, and the surplus power will be used for charging energy storage system.*
- Up to 24 charging and discharging or self-consumption periods can be set.
- It is suitable for areas with peak and valley electricity prices and significant price differences.
- When entering this period, the battery capacity will be recorded. When the photovoltaic power is greater than the load, the remaining photovoltaic power will charge the battery. When the photovoltaic power is less than the load, the battery can be discharged to the load. However, when the battery capacity decreases and approaches the battery capacity value when entering this period, the battery will stop discharging.

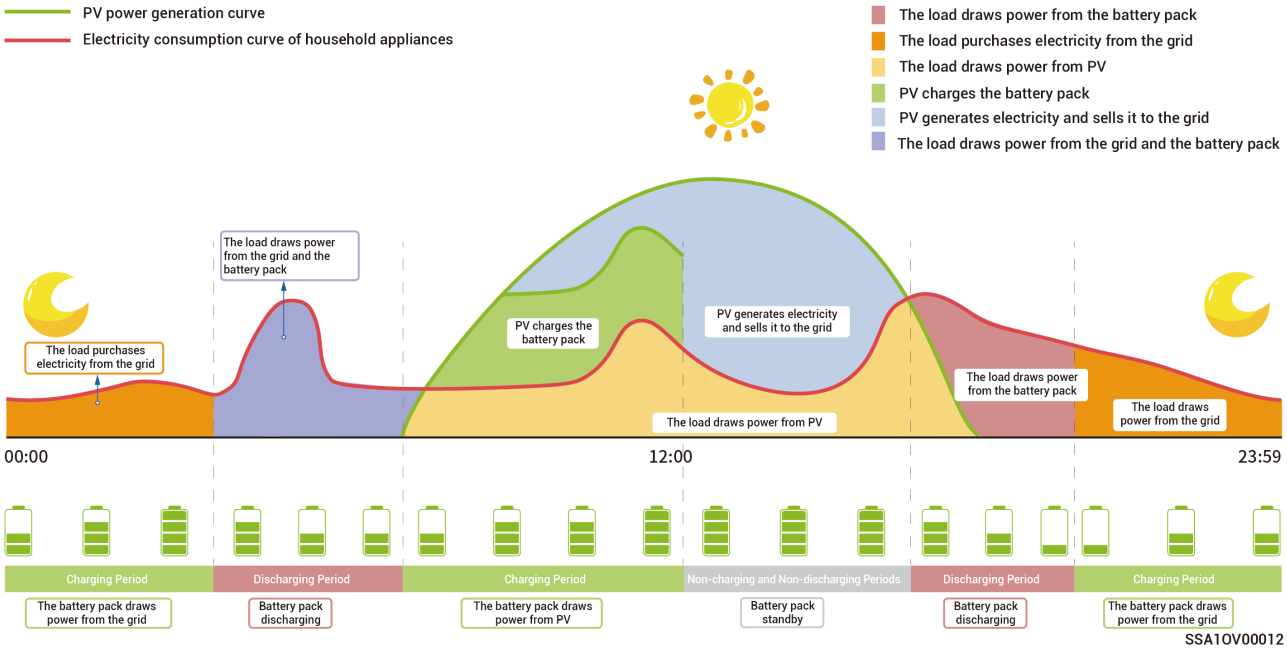

Fully Fed to Grid Mode

- You can sell excess energy back to the grid and earn credits on your energy bill.
- In the daytime, when the PV power is greater than the maximum output capacity of the inverter, the inverter maintains the maximum output while storing excess energy in the batteries. When the PV power is lower than the maximum output capacity of the inverter or there is no PV power in the nighttime, the batteries are discharged to ensure that the inverter maximizes the output.

Remote EMS Mode

After setting to this mode will allows a third-party EMS to schedule parameters related to the power station and the product set by the company. Do not enter or exit this mode without the installer's confirmation.

Load Shedding Mode

In areas with frequent power outages, you can add your region and schedule in this mode, and the system will fully charge the battery in advance as scheduled, ensuring that you have battery power available to supply the load during outages. (currently only supported in South Africa)

VPP Scheduling-evergen Mode

Once registered with the VPP, your storage system will join the smart dispatching network. The App will show and auto-enable this mode.

5.2 Backup Power Setup

Tips

- Skip this section if no Gateway is configured.
- Users can manually set this parameter according to the power interruption frequency of their regions and leave time.

If there is a Gateway in your system wiring, you can manually set the "Backup Reserve" value in the mySigen App. In grid connection mode, the battery stops discharging when the backup power SOC setting is reached. In the off-grid event, the battery capacity reserved for backup becomes available for use.

For example: The backup power SOC is set in Self-Consumption Mode.

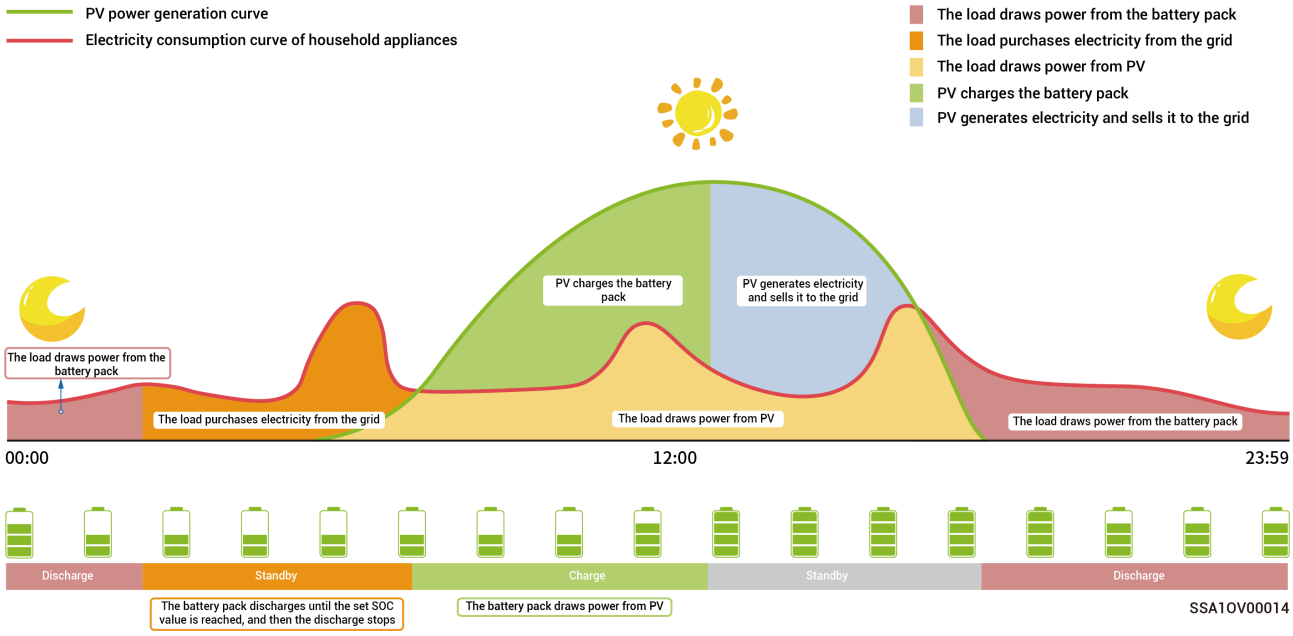

5.3 Peak Shaving

Tips

- The electricity bill in some regions is calculated as follows: Total electricity bill = Cost at peak power + Cost for electricity usage + Other costs. Wherein, peak power refers to the maximum power imported from the grid. This mode is suitable for regions with peak and valley electricity prices and significant price differences.
- The Peak Shaving function can be used with all working modes, configuring the maximum peak power drawn from the grid to reduce the maximum peak power drawn from the grid during peak periods, thereby lowering the electricity bill.

Case 1: Self-Consumption Mode Settings for Peak Shaving

Assume the Peak Shaving setting has a peak shaving SOC of 50% and a maximum peak power of 2 kW. Because the total electricity bill = Cost at peak power + Cost for electricity usage + Other costs. Wherein, peak power refers to the maximum power imported from the grid. After setting Peak Shaving in Self-Consumption, the power purchased from the grid dropped from 5 kW to 2 kW, so the total electricity bill decreases.

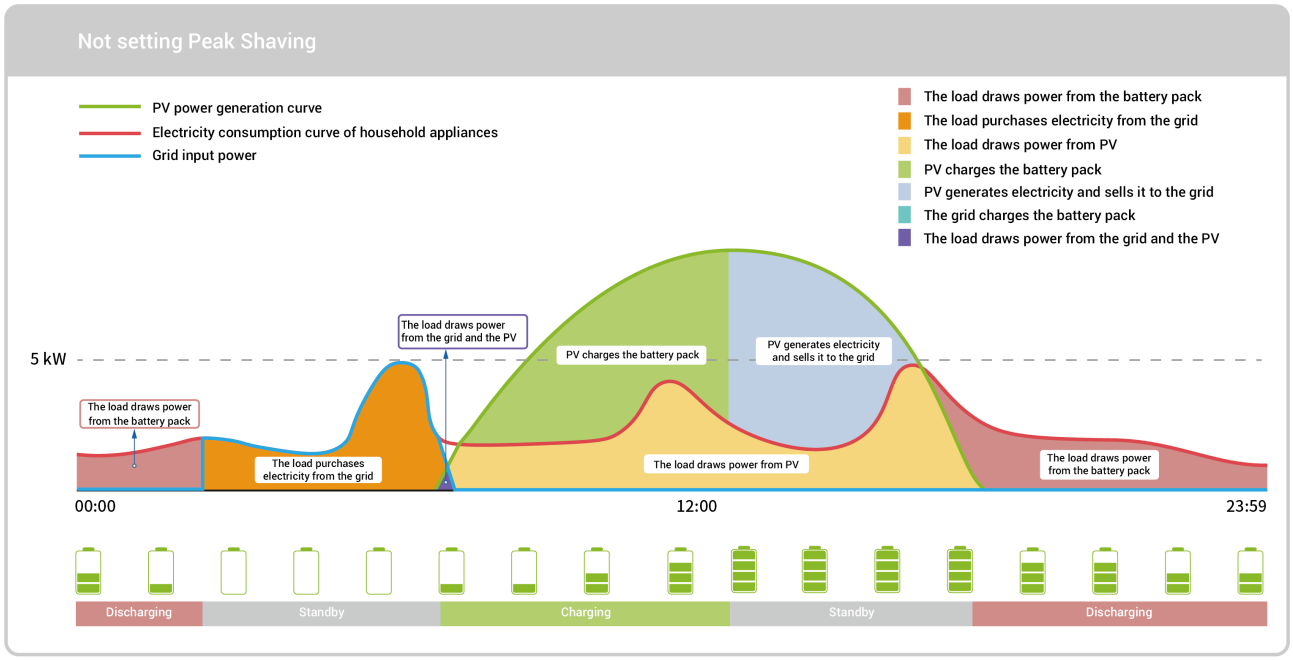

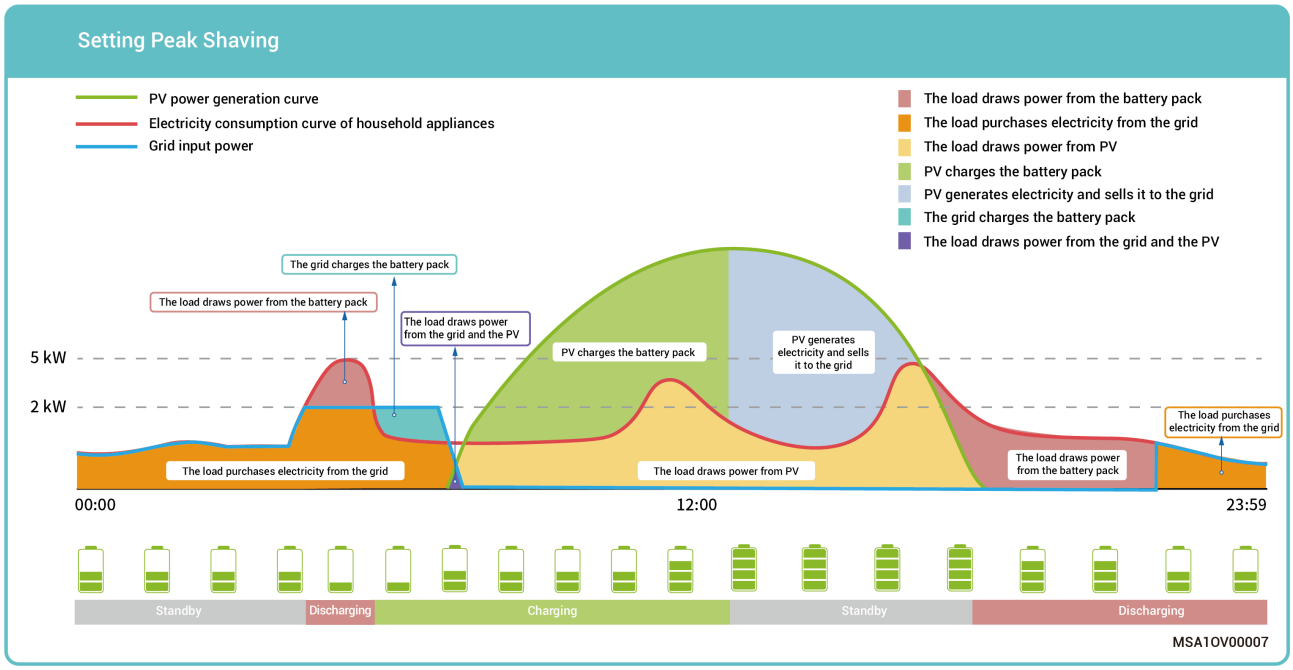

Case 2: Time-based Control Mode Settings for Peak Shaving

Assume the Peak Shaving setting has a peak shaving SOC of 50% and a maximum peak power of 2 kW. Because the total electricity bill = Cost at peak power + Cost for electricity usage + Other costs. Wherein, peak power refers to the maximum power imported from the grid. After setting Peak Shaving in Time-based Control, the power purchased from the grid drops from 5 kW to 2 kW, so the total electricity bill decreases.

Not setting Peak Shaving

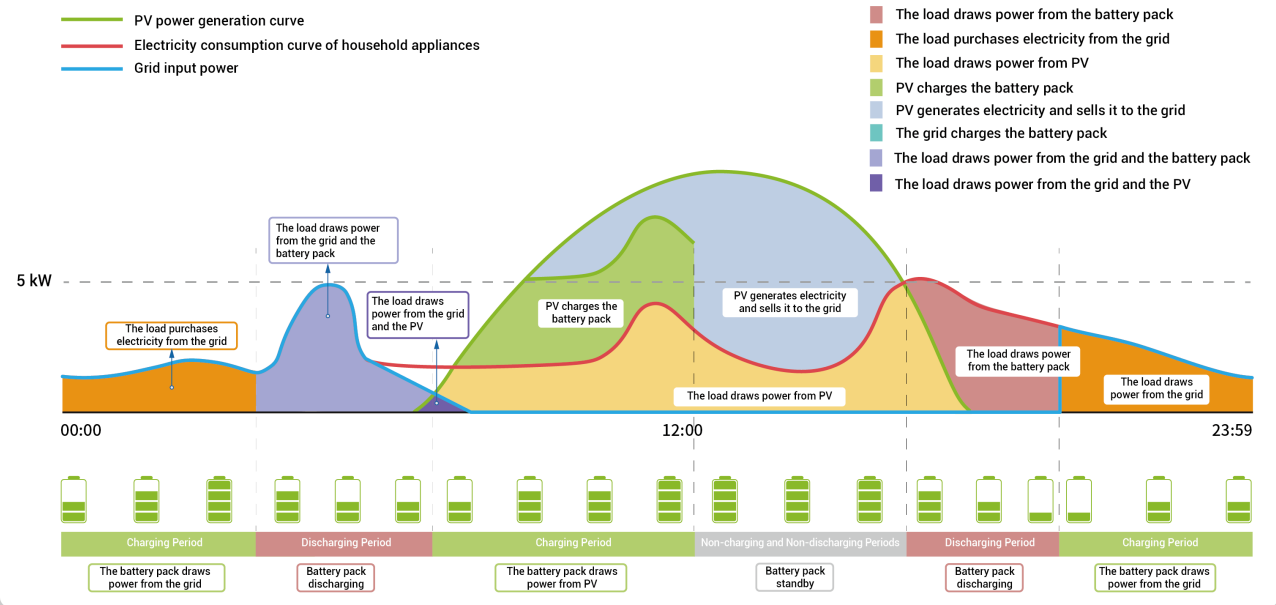

Setting Peak Shaving

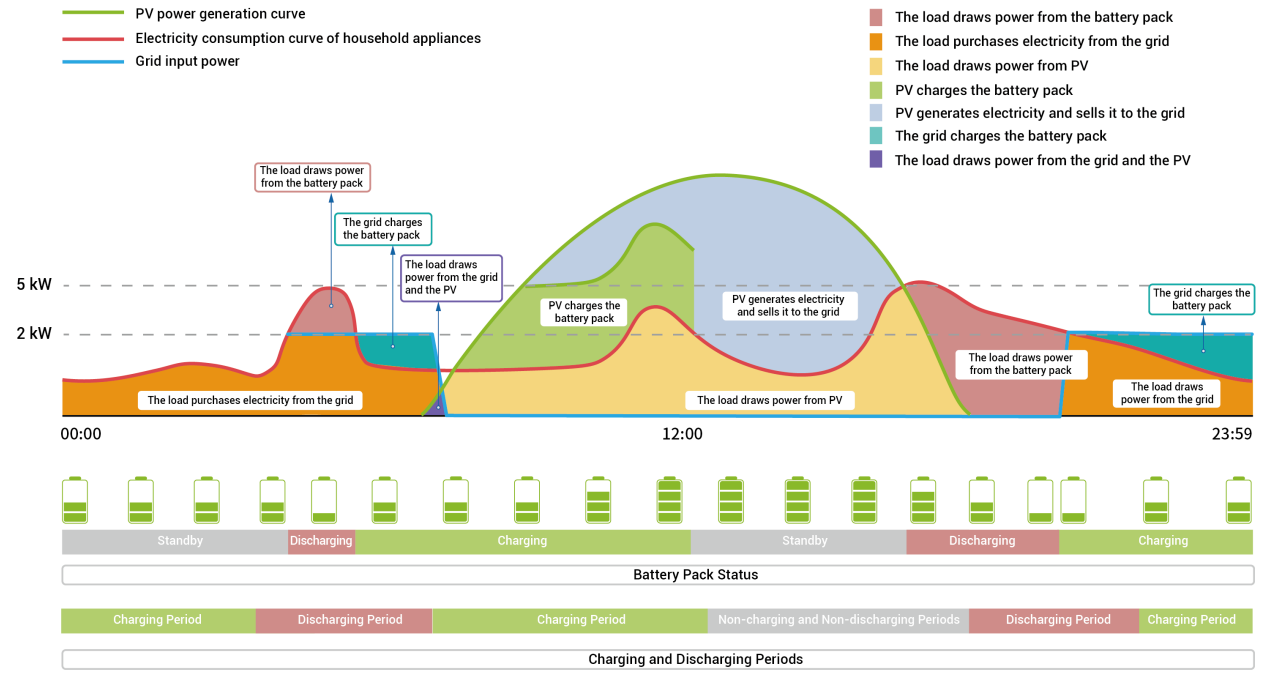

5.4 LED Indicator State

SigenStor EC/ Sigen Hybrid Indicator

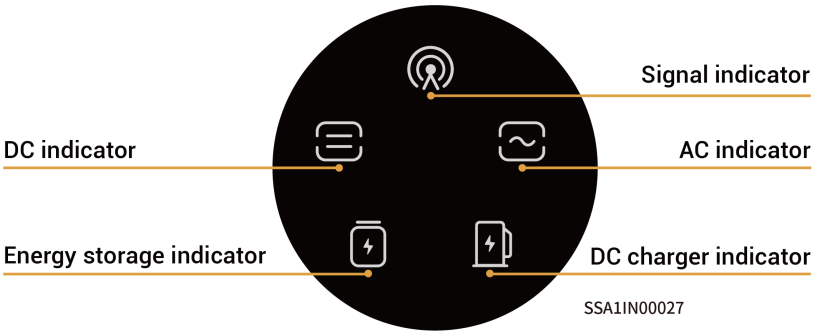

Tips

For the definition of DC charger indicator LEDs, refer to the LED Indicator Status chapter in *Sigen EV DC Charging ModuleUser Manual*. For definitions of other indicators, see the table below.

Category	Indicator	Description	Meaning
DC indicator		Solid white	The DC side has been connected, but is not running.
		Solid green	The DC side is running.
		Off	The DC side is not connected.
		Orange flashing	The DC side fails.
		Solid red	The inverter fails.
AC indicator		Solid white	The AC side has been connected, but is not running.
		Solid green	Running in an on-grid state.
		Off	The AC side is not connected.
		Solid blue	Running in an off-grid state.
		Blue flashing	Running with overload in an off-grid state.
		Orange flashing	The AC side fails.
		Solid red	The inverter fails.
Energy storage indicator		Solid white	All SigenStor BAT units have been connected, but are not running.
		Green flashing	SigenStor BAT is being charged.

Category	Indicator	Description	Meaning
Energy storage indicator		Blue flashing	SigenStor BAT is being discharged.
		Off	All SigenStor BAT units are in sleep mode.
		Red flashing	Partial SigenStor BAT units fail.
		Solid red	All SigenStor BAT units fail.
Signal indicator		Off	The management system is not connected.
		Green flashing	The near-end app has been connected.
		Solid green	The management system has been connected via FE or WLAN.
		Solid blue	The management system has been connected via 4G.
		Blue flashing	Insufficient traffic for Sigen CommMod.

CommMod Indicator

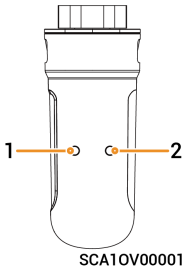

S/N	Name	State	Description
1	Power indicator	-	-
2	Network state indicator	Slow flashing (200 ms on/1800 ms off)	The network is being connected
		Slow flashing (1800 ms on/200 ms off)	Standby.
		Quick flashing (125 ms on/125 ms off)	Data is being transferred.

5.5 mySigen App — Query and Settings

The app can be downloaded in the following two methods. For details, please refer to *mySigen App User Manual*.

Chapter 6 System Maintenance

6.1 Routine Maintenance

To ensure long-term optimal operation of the device, it is recommended to perform routine maintenance as described in this chapter.

Inspection Item	Inspection Method	Power Off or Not	Maintenance Interval
System cleaning	Regularly check whether the decorative cover or fan is covered and dirty. Clean it up when necessary. Do not use tools that may cause electric shock or with damaged insulation when cleaning up, such as wire brushes.	Yes	Once every 3 months
System operating status	● Check whether the equipment appearance is damaged or deformed. ● Check for noise when the device is operating. ● When the device is operating, check whether the device parameters are correctly set.	No	Once every 6 months.
System Maintenance	Check regularly whether the AC terminal gland and the communication port gland are loose.	No	Once every 6 months.

6.2 Equipment Power-on/Power-off

Scheme 1: App operation

In the mySigen app, tap "Settings" to turn the device on or off.

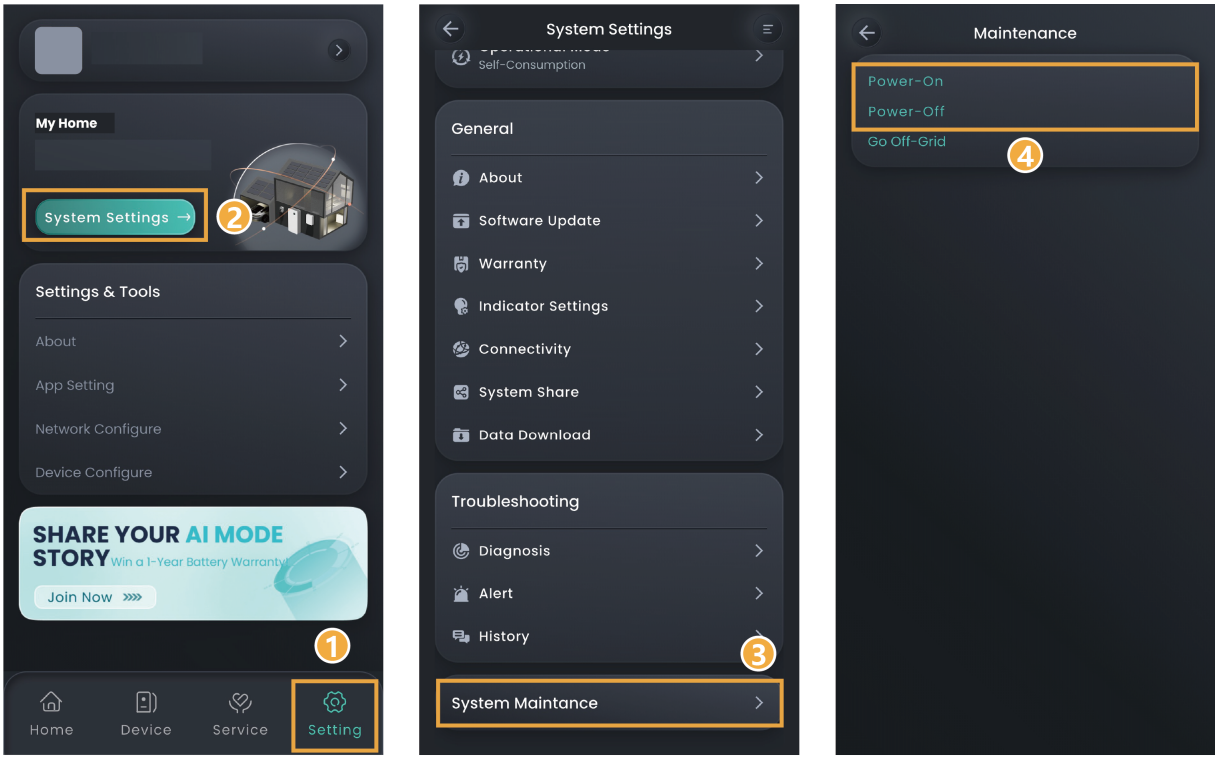

MSA1IN00001

Scheme 2: Manual operation

Follow the steps shown to remove the side and top decorative cover, and press the ON/OFF switch button.

Tips

Press and hold for more than 3s to turn on or off the power; an interval of more than 10s is needed between power-on and power-off.

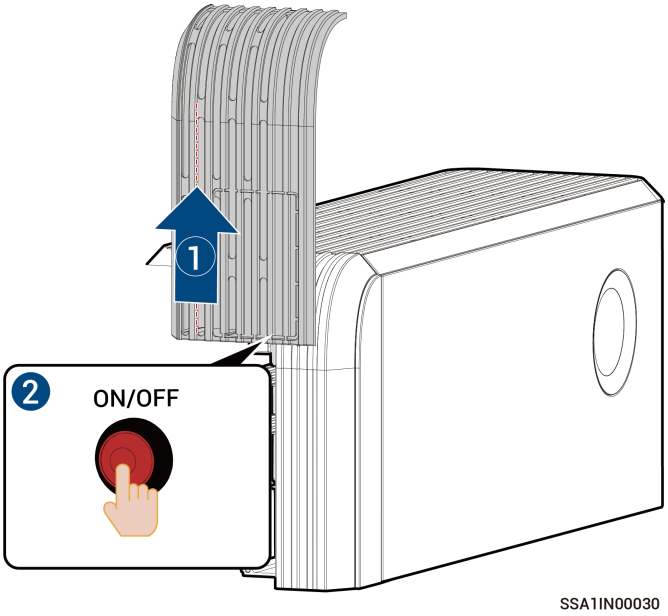

Tips

Major firmware upgrades can fail if the equipment is not connected to the internet for an extended period of time. When your device is not connected to the internet, the system issues periodic notifications. If the disconnection persists beyond 90 consecutive days, the system will automatically engage in safe operating mode for safety compliance. Reconnect to the internet immediately. For unresolved issues, feel free to contact us.

6.3 Operating with Low Battery

Due to the battery pack's self-discharge characteristics, power loss can occur. If the device is left uncharged for an extended period, overdischarge may occur and damage the device. Recharge the device promptly when it is at low charge.
Under normal conditions, the device can recharge itself as operating conditions allow. If the device cannot charge, contact your installer or sales representative promptly and resolve the issue within the specified time frames. If battery capacity loss or irreversible damage results from exceeding those time limits, our company is not responsible.

- Recharge within 30 days when the battery level is ≥ 10%
- Recharge within 7 days when 0% ≤ battery level< 10%

Possible Scenarios That May Prevent Charging (Including but Not Limited to):

- No PV input, and the grid side has prolonged power loss.
- Device failure.
- Parameters are not set correctly.

6.4 Emergency Measures

Fire Emergency Measures

Danger

- Shut down the device or cut off the mains switch if it is safe to do so.
- High temperatures can deform or damage the battery pack, causing the electrolyte to leak and even release toxic gases. Do not approach; wear personal protective equipment.
- If the fire is small, use a carbon dioxide or ABC dry powder fire extinguisher to extinguish the fire.
- If the fire is spreading, evacuate from the building or device area immediately and call the fire department. Do not go back inside the building.
- Do not expose firefighters to high-voltage components during firefighting. Otherwise, the risk of electric shock may exist.
- After extinguishing the fire, do not use the device. Contact your sales representative.

Flood Emergency Measures

Danger

- Shut down the device or cut off the mains switch if it is safe to do so.
- Do not touch the battery pack if it is submerged to avoid electric shock.
- After flooding subsides, do not use the device. Contact your sales representative.

Emergency Measures for Battery Pack Abnormalities

Danger

- If the battery pack emits abnormal odors, leaks electrolyte, overheats, or shows other abnormalities, do not approach or touch it; contact professionals immediately to handle it. Professionals must wear goggles, rubber gloves, gas masks, protective clothing, and other personal protective equipment to protect themselves.
- Electrolyte is corrosive. Contact may cause skin irritation or chemical burns. If you accidentally come into contact with the electrolyte, immediately take the following measures:
  - Inhalation: Evacuate the contaminated area, maintain fresh air circulation, and seek medical attention immediately.
  - Eye contact: Flush eyes with plenty of water for ≥ 15 minutes; do not rub; seek medical attention immediately.
  - Skin contact: Wash the affected area with plenty of soap and water, and seek medical attention immediately.
  - Ingestion: Induce vomiting, and seek medical attention immediately.
- Do not continue to use abnormal battery packs. Contact your sales representative.

Emergency Measures for Battery Pack Drop or Impact

- If you notice a strong odor, smoke, fire, or similar, move away from the device immediately and contact professionals to handle it.
- Do not use the battery pack after it has been dropped or impacted. Contact your sales representative.

Chapter 7 Appendix

7.1 Technical Parameter

For details about equipment parameters, see the Datasheet of the product.

7.2 Compliance Statements

Warning

This product may expose you to lead and other chemicals that the State of California has identified as causing cancer, birth defects, or other reproductive harm. For more information, please visit: www.P65Warnings.ca.gov.